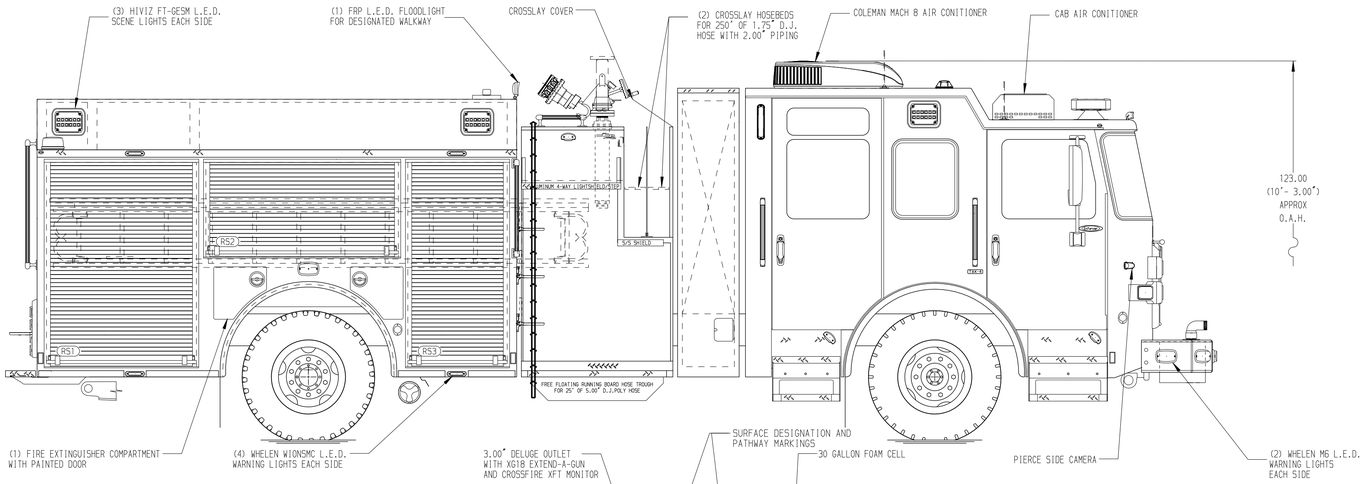

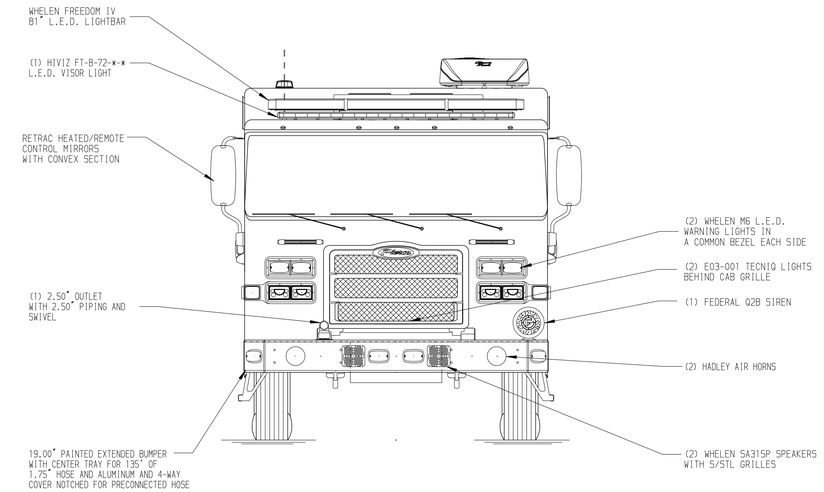

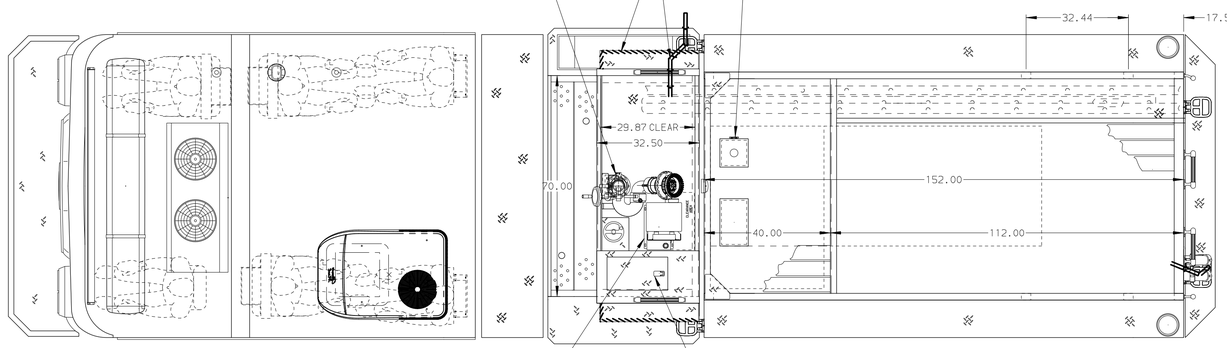

HOSEBED CAPACITIES

1 - 250' OF 2.50" TRU-ID KEY HOSE
2 - 250' OF 1.75" TRU-ID KEY HOSE
3 - 600' OF 3.00" B1G-10 KEY HOSE
4 - 1000' OF 5.00" B1G-10 KEY HOSE

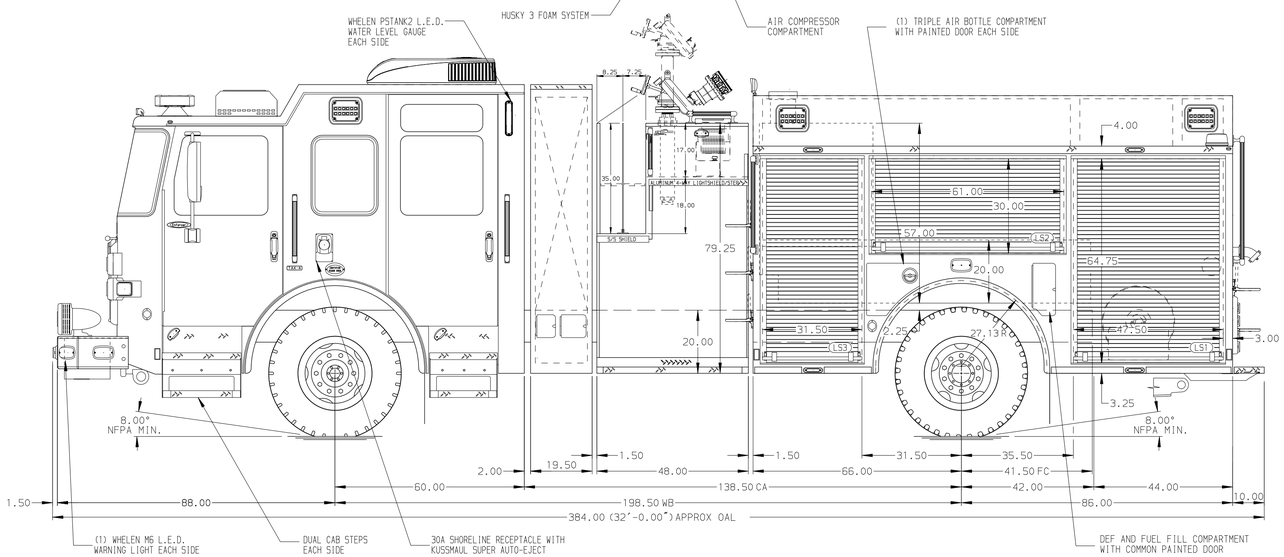

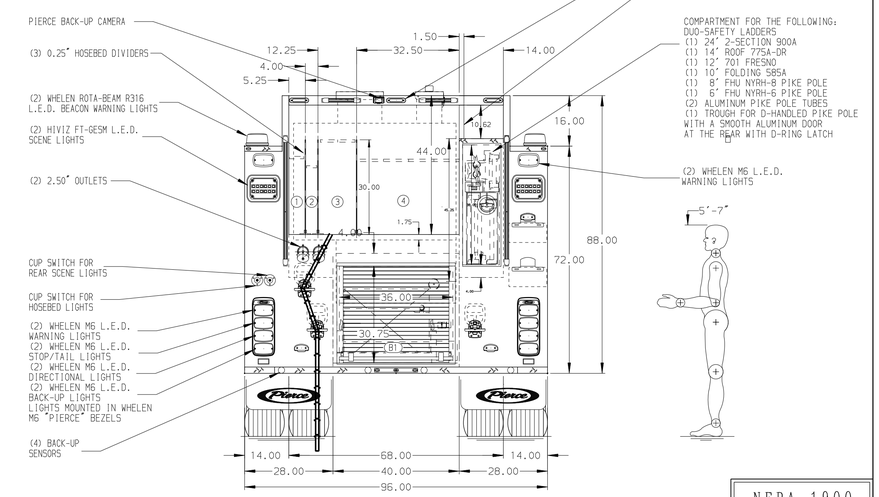

ALUMINUM BODY

SIDE ROLL AND FRONTAL IMPACT PROTECTION

NFPA 1900 (2024) COMPLIANT

Pierce MANUFACTURING INC.

NOTE

DIMENSIONS SHOWN ARE APPROXIMATE AND ARE SUBJECT TO MINOR DEVIATIONS AS MAY OCCUR OR BE NECESSARY IN CONSTRUCTION.
MINOR DETAILS NOT SHOWN.

1. AIR INLET/OUTLET LOCATED ON THE DRIVER'S SIDE PUMP PANEL
2. DUAL L.E.D. LIGHT STRIPS LOCATED IN HOSE BED

REV	DATE	BY	CH
3	07OCT24	JJB	KBO
2	22AUG24	LST	KBO
1	27JUN24	JJB	KBO

CHASSIS DATA	
MAKE	PIERCE
MODEL	ENFORCER VOLTERRA
TITLE	1500 GPM, 530G TANK, 500G WATER, 30G FOAM 152" 2G PUMPER, VHV
FOR	DALLAS FIRE DEPARTMENT DALLAS, TEXAS
DWG NO.	43005AD-SH1

JOB NO.	43005
SCALE 1:24	DATE
DRAWN BY JJB	18JUN24
CHECKED BY KBO	19JUN24
SHEET SIZE D	SHEET NO. 1 OF 2

View File Created 16-OCT-2024 14:50:57