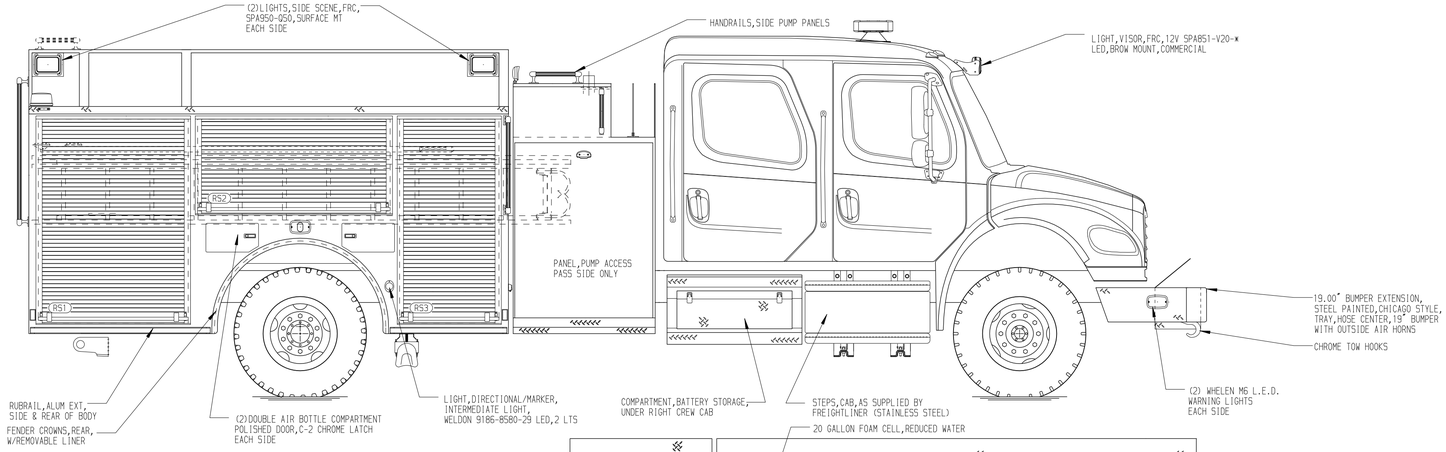

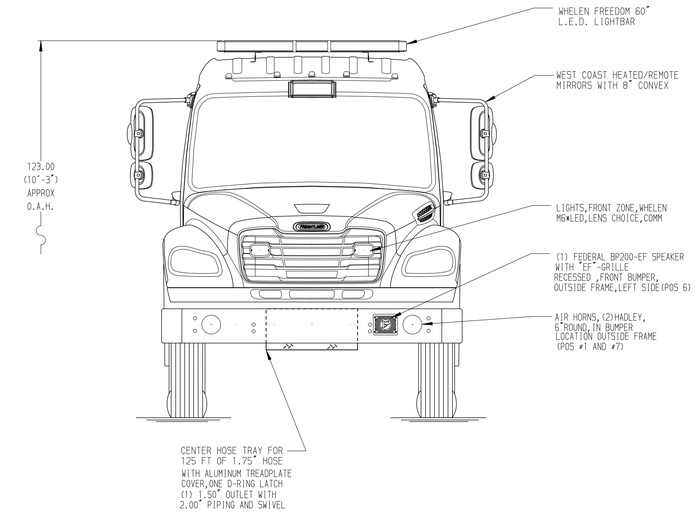

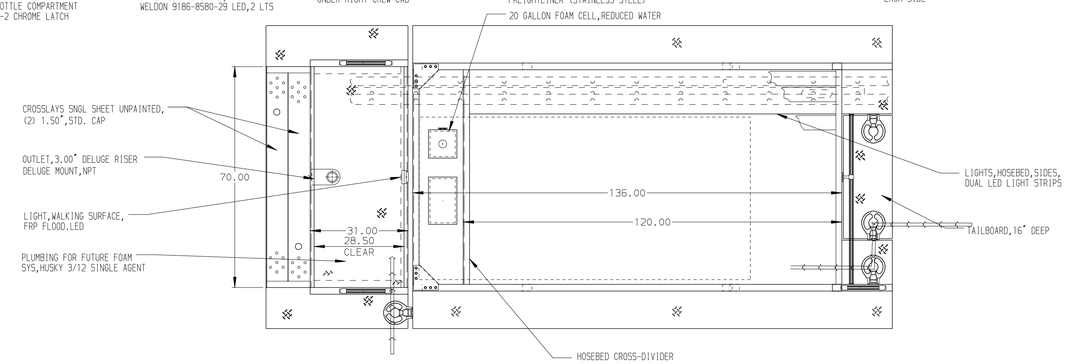

HOSEBED CAPACITY

BED 1
1000' OF 5.00" D.J. POLY HOSE

BED 2
600' OF 3.00" D.J. POLY HOSE

BED 3
400' OF 3.00" D.J. POLY HOSE

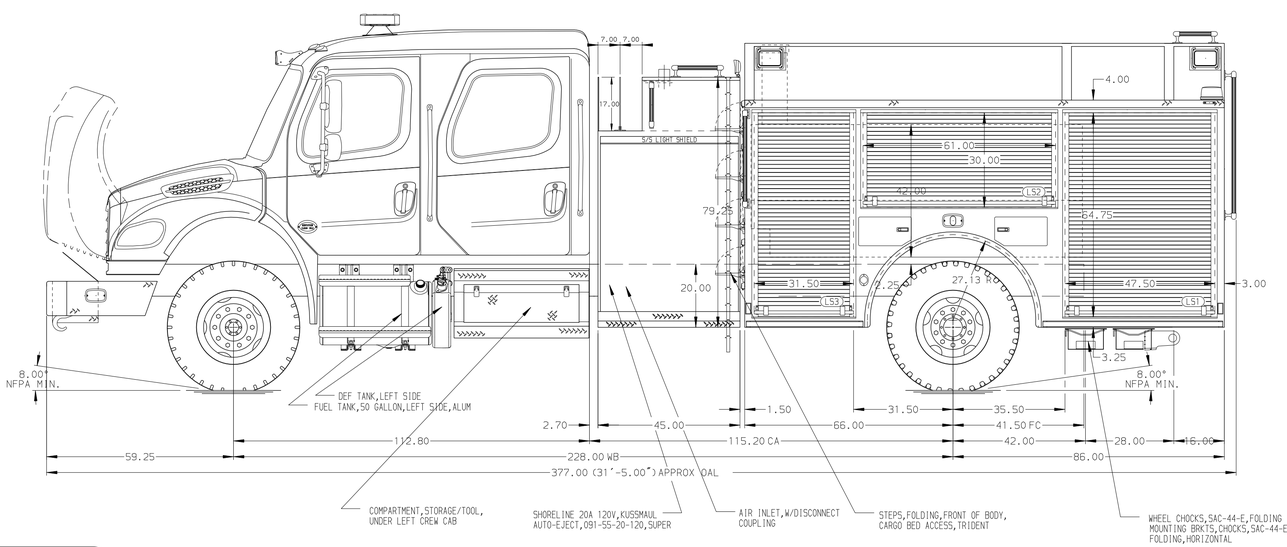

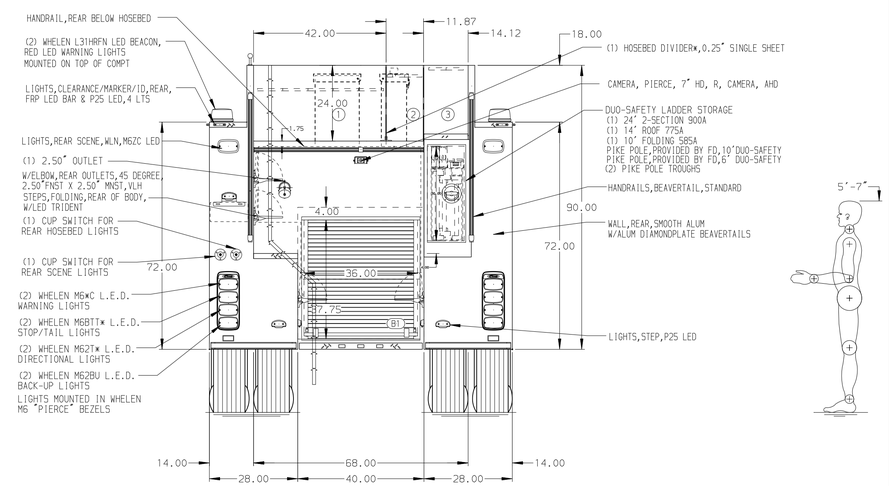

ALUMINUM BODY

NOTE
DIMENSIONS SHOWN ARE APPROXIMATE AND ARE SUBJECT TO MINOR DEVIATIONS AS MAY OCCUR OR BE NECESSARY IN CONSTRUCTION.
MINOR DETAILS NOT SHOWN.

REV	DATE	BY	CH
B	05FEB25	RHU	DDR
A	22OCT24	VHO	AJA

CHASSIS DATA
MAKE: FL
MODEL: M2-106 PLUS

Pierce MANUFACTURING INC.

TITLE: 1500GPM, 750G TANK, 730G WATER, 20G FOAM 152" BODY PUMPER, HARDWIRED
FOR: PIERCE FIELD UNIT -
DWG NO.: 43037AD

JOB NO.	43037
SCALE	1:24
DATE	
DRAWN BY	VHO 18SEP24
CHECKED BY	AJA 19SEP24
SHEET SIZE	D
SHEET NO.	1 OF 1

View File Created 05-FEB-2025 13:49:59