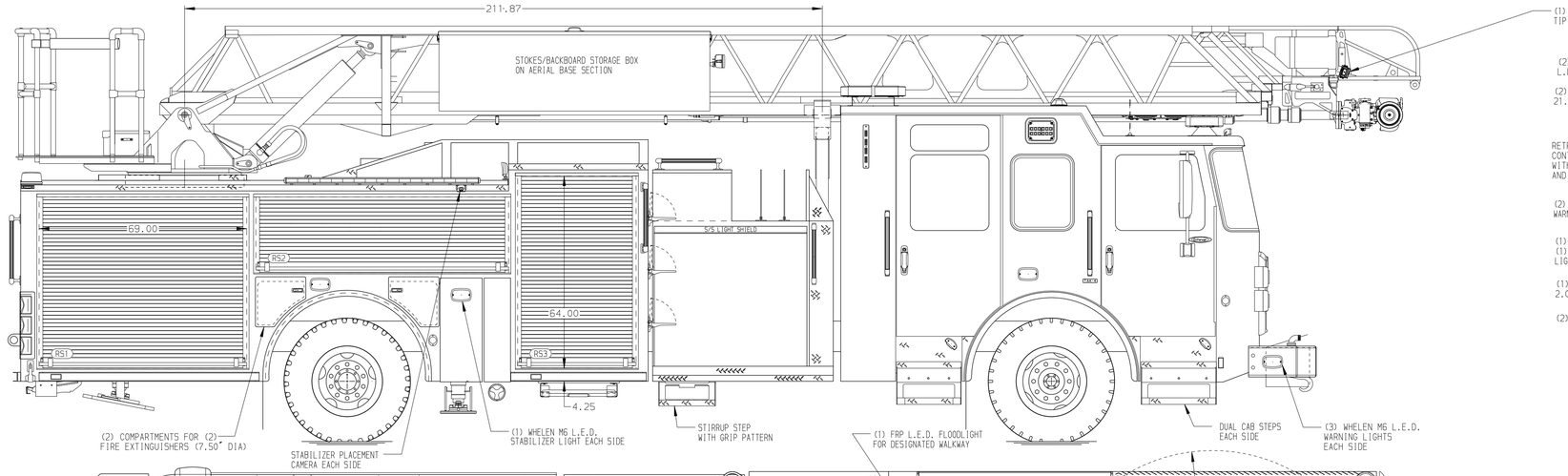

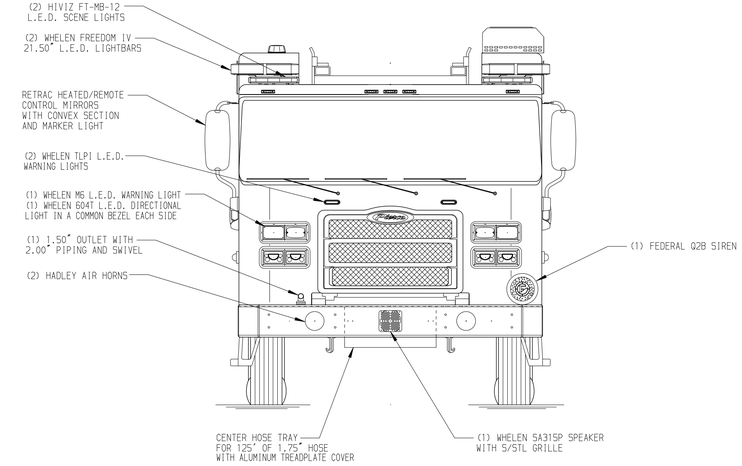

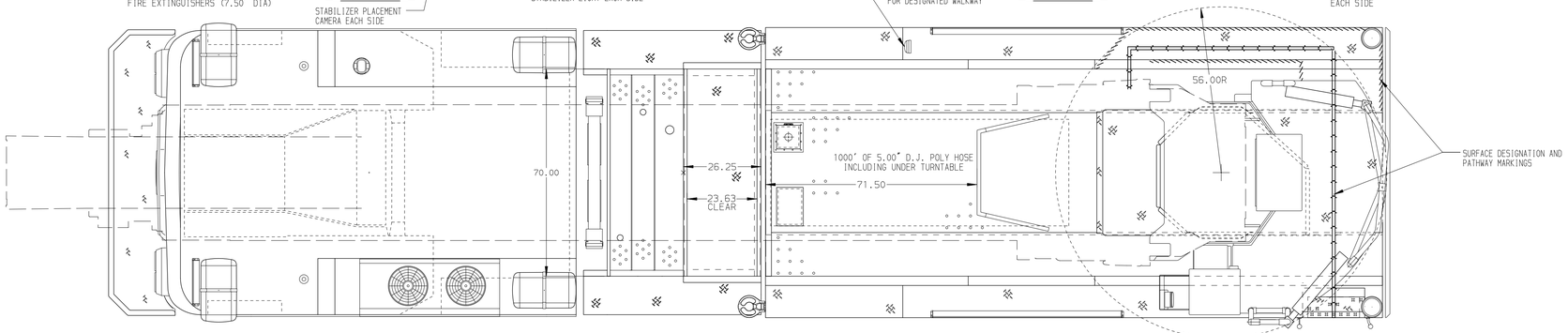

BODY	WATER TANK
107' ASL Aluminum Body	500 Gallon Poly Water Tank
COMPT,LEFT SIDE FRONT	Foam System
Full Height Rollup Forward	Plumbing for Future Husky Foam System
COMPT,LEFT SIDE REAR	Foam Cell
Full Height Rollup Rearward	20 Gallon Foam Cell, Non Reduced Water
COMPT,RIGHT SIDE FRONT	
Full Height Rollup Forward	
COMPT,RIGHT SIDE REAR	
Full Height Rollup Rearward	

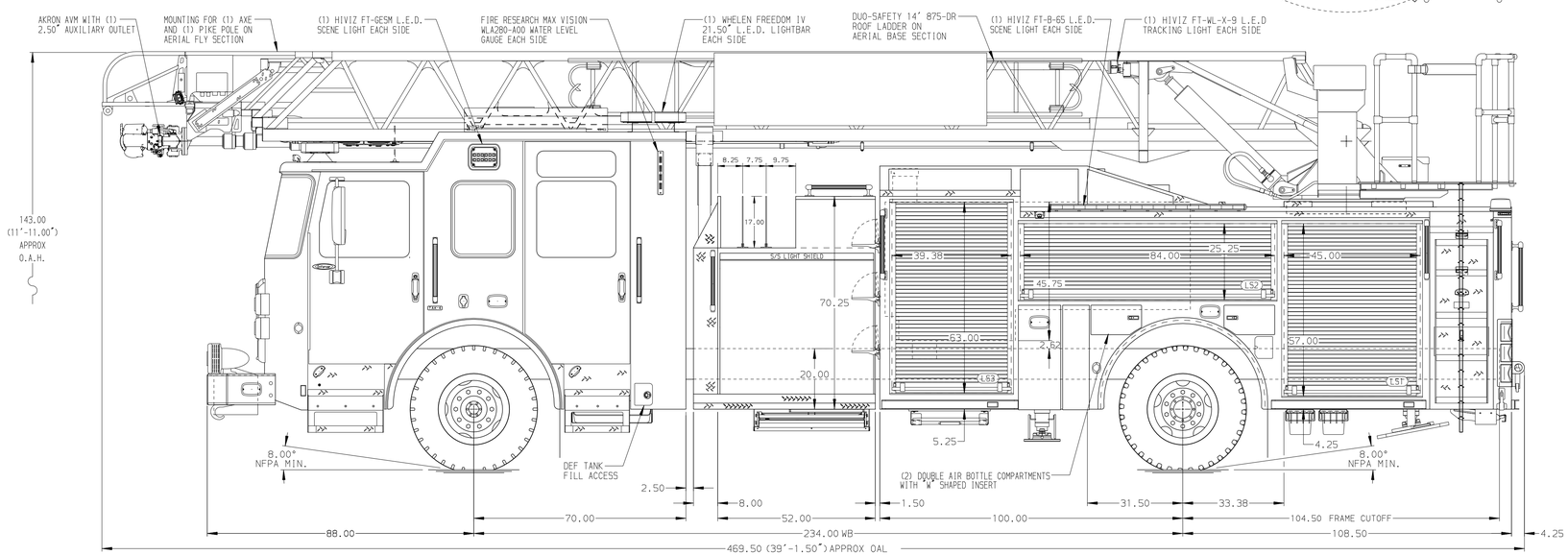

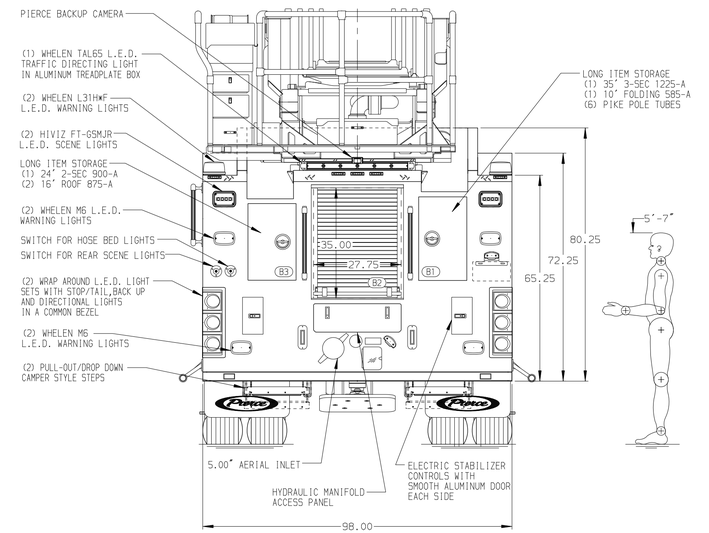

CHASSIS	CAB	AXLE,FRONT,CUSTOM	TRANSMISSION	PUMPHOUSE	CROSSLAYS,1.50"	SPEEDLAYS	SAFETY
Enforcer Chassis	7010 Enforcer Notched Cab	22,800 Lb TAK-4 Axle	ALlison 6th Gen, 4000 EVS P	52" Control Zone Side Mount	(2) 1.50" Standard Capacity	Speedlays Not Required	Side Roll and Frontal Impact Protection
ENGINE	BUMPER	AXLE,REAR		PUMP	CROSSLAYS,2.50"	GENERATOR	
510 HP Paccar MX13 Engine	19" Extended Painted Steel	33,500 Lb Meritor Axle		2000 GPM Waterous CSU	(1) 2.50" Standard Capacity	Generator Not Required	

CUSTOMER APPROVAL

APPROVED BY:_____

DATE:_____

Pierce MANUFACTURING INC.

REV	DATE	BY	CH
▽	-	-	-

CHASSIS DATA

MAKE: PIERCE

MODEL: ENFORCER

TITLE: 107' ASCENDANT AERIAL LADDER AND BODY ASSEMBLY

FOR: ST. GEORGE FIRE DISTRICT #2, BATON ROUGE, LA

DWG NO.: 43042AD

JOB NO.	SCALE	DRAWN BY	CHECKED BY	SHEET SIZE	SHEET NO.
43042	1:24	SHU	AST	D	1 OF 1

DATE: 040CT24 / 090CT24

NOTE

DIMENSIONS SHOWN ARE APPROXIMATE AND ARE SUBJECT TO MINOR DEVIATIONS AS MAY OCCUR OR BE NECESSARY IN CONSTRUCTION.
MINOR DETAILS NOT SHOWN.

1. SHORELINE RECEPTACLE WITH KUSSMAUL SUPER AUTO-EJECT LOCATED ON DRIVER SIDE OF THE CAB
2. AIR INLET WITH DISCONNECT COUPLING LOCATED FORWARD IN THE DRIVER SIDE STEPWELL
3. BATTERY CHARGER LOCATED BEHIND DRIVER'S SEAT
4. BATTERY CHARGE INDICATOR LOCATED ON DRIVER SEAT RISER
5. TWELVE ADJUSTABLE SHELVES LOCATED IN COMPARTMENTS PER ORDER
6. ONE FLOOR MOUNTED SLIDE-OUT TRAYS LOCATED IN COMPARTMENTS PER ORDER
7. ONE 6-PLACE 120V RECEPTACLE LOCATED IN COMPARTMENT PER ORDER
8. ALUMINUM TREADPLATE ON TOP OF THE CAB ROOF
9. RUNG LIGHTING ON AERIAL LADDER
10. 1500 GPM HIGH FLOW WATERWAY
11. PLUMBING FOR FUTURE HUSKY 3/12 FOAM SYSTEM
12. 2-WAY INTERCOM SYSTEM BETWEEN AERIAL TIP AND TURNTABLE
13. LIFTING EYE ROPE RESCUE ATTACHMENT AT AERIAL TIP
14. LIMITED RETRACTION NOT REQUIRED
15. NON-RAISED AERIAL PEDESTAL

View File Created 10-OCT-2024 06:57:44