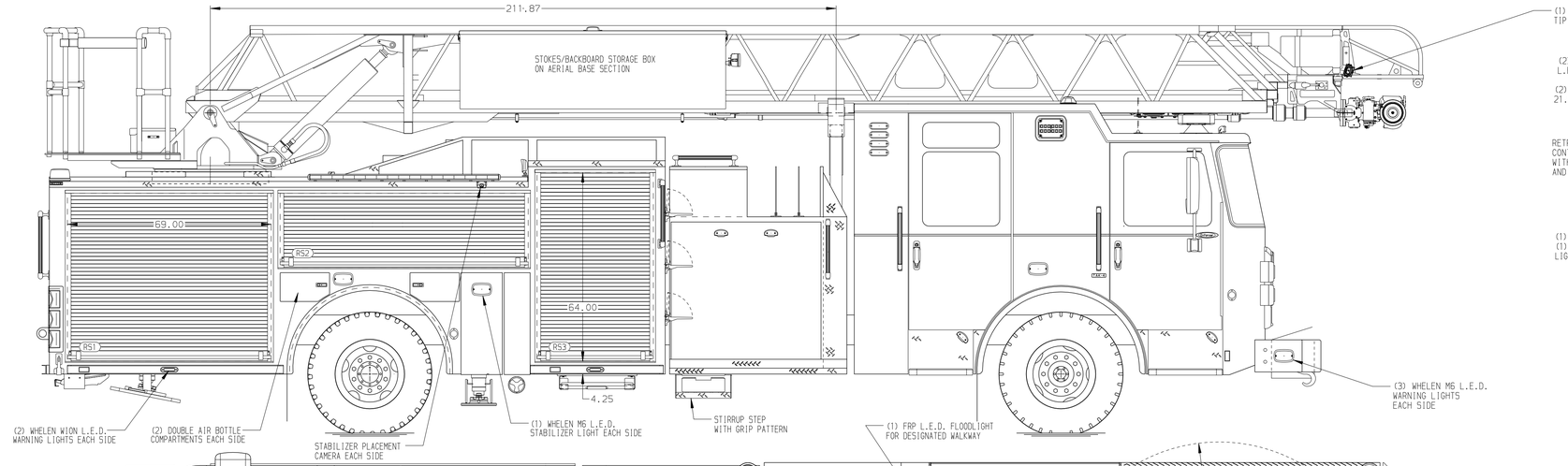

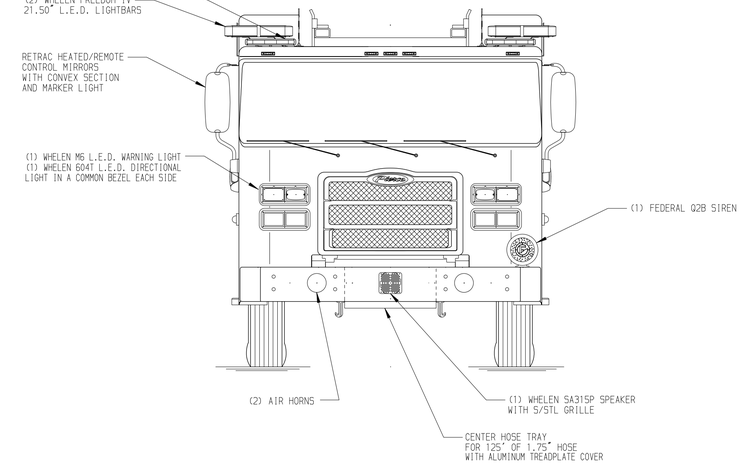

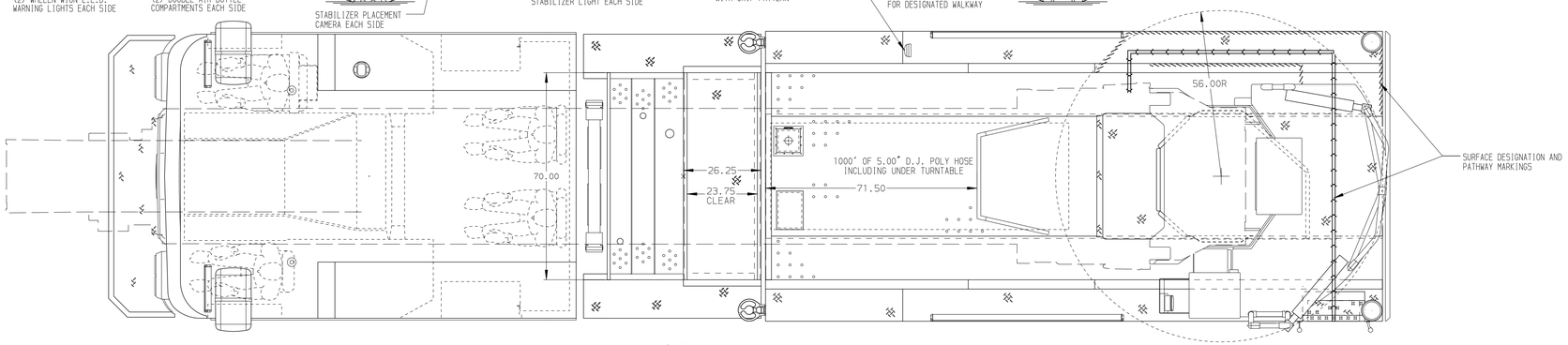

BODY	WATER TANK
107' ASL Aluminum Body	500 Gallon Poly Water Tank
COMPT,LEFT SIDE FRONT	**Foam System**
Full Height Rollup Forward	Plumbing for Future Husky Foam System
COMPT,LEFT SIDE REAR	**Foam Cell**
Full Height Rollup Rearward	20 Gallon Foam Cell, Non Reduced Water
COMPT,RIGHT SIDE FRONT	
Full Height Rollup Forward	
COMPT,RIGHT SIDE REAR	
Full Height Rollup Rearward	

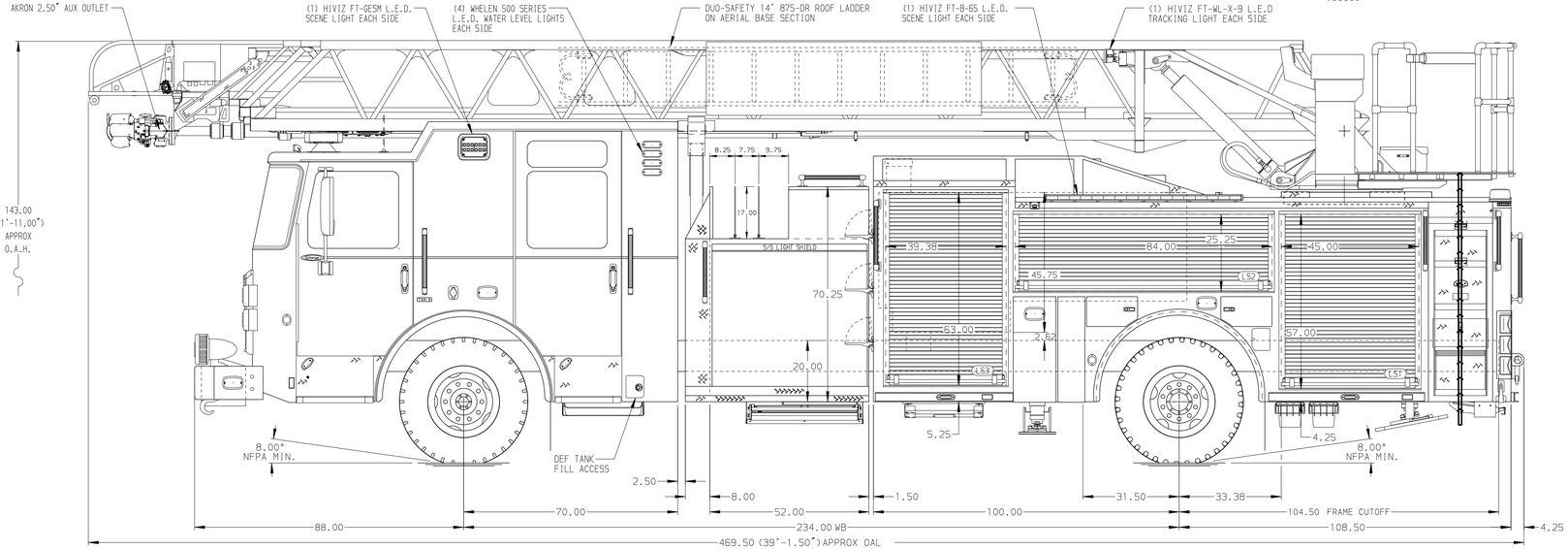

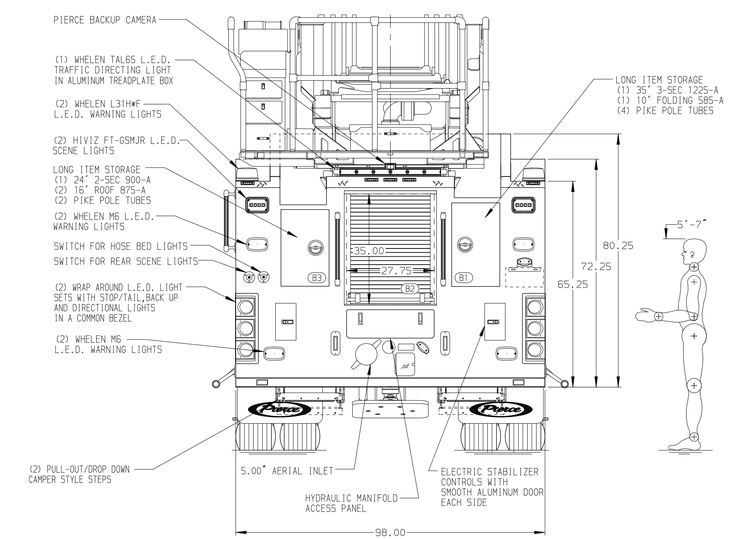

CHASSIS	CAB	AXLE,FRONT,CUSTOM	TRANSMISSION	PUMPHOUSE	CROSSLAYS,1.50"	SPEEDLAYS
Enforcer Chassis	7010 Enforcer Notched Cab	22,800 Lb TAK-4 Axle	Allison 6th Gen, 4000 EVS P	52" Control Zone Side Mount	(2) 1.50" Standard Capacity	Speedlays Not Required
ENGINE	**BUMPER**	**AXLE,REAR**		**PUMP**	**CROSSLAYS,2.50"**	**GENERATOR**
510 HP Paccar MX13 Engine	19" Extended Painted Steel	33,500 Lb Meritor Axle		2000 GPM Waterous CSU	(1) 2.50" Standard Capacity	Generator Not Required

NOTE

DIMENSIONS SHOWN ARE APPROXIMATE AND ARE SUBJECT TO MINOR DEVIATIONS AS MAY OCCUR OR BE NECESSARY IN CONSTRUCTION.
MINOR DETAILS NOT SHOWN.

1. SHORELINE RECEPTACLE WITH KUSSMAUL SUPER AUTO-EJECT LOCATED ON DRIVER SIDE OF THE CAB
2. AIR INLET WITH DISCONNECT COUPLING LOCATED FORWARD IN THE DRIVER SIDE STEPWELL
3. BATTERY CHARGER LOCATED PER ORDER
4. BATTERY CHARGE INDICATOR LOCATED PER ORDER
5. ONE 1.50" OUTLET WITH 2.00" PIPING AND SWIVEL LOCATED IN CENTER BUMPER TRAY
6. SIX ADJUSTABLE SHELVES LOCATED IN COMPARTMENTS PER ORDER
7. THREE FLOOR MOUNTED SLIDE-OUT TRAYS LOCATED IN COMPARTMENTS PER ORDER
8. ONE CTECH CABINET LOCATED IN COMPARTMENT PER ORDER
9. LIMITED RETRACTION NOT REQUIRED
10. TWO RECEPTACLE STRIPS LOCATED IN COMPARTMENTS PER ORDER
11. ONE SWING-OUT ALUMINUM TOOLBOARD LOCATED IN COMPARTMENT PER ORDER
12. ONE VERTICAL PARTITION LOCATED IN COMPARTMENT PER ORDER
13. ONE BACK-WALL MOUNTED PEGBOARD LOCATED IN COMPARTMENT PER ORDER
14. MOUNTING PROVISIONS FOR FRONT INLET
15. RUNG LIGHTING ON AERIAL LADDER
16. NON-RAISED AERIAL PEDESTAL
17. 1500 GPM HIGH FLOW WATERWAY

REV	DATE	BY	CH
V	23SEP24	ANZ	AST

CHASSIS DATA — MAKE: PIERCE — MODEL: ENFORCER

PIERCE MANUFACTURING INC.

TITLE: 107' ASCENDANT AERIAL LADDER AND BODY ASSEMBLY

FOR: CARLYSS FIRE DEPARTMENT, LAKE CHARLES, LA

DWG NO.: 43043AD

JOB NO.	43043
SCALE	1:24
DATE	
DRAWN BY	ANZ
DATE	05AUG24
CHECKED BY	AST
DATE	07AUG24
SHEET SIZE	D
SHEET NO.	1 OF 1

View File Created 24-SEP-2024 09:42:09