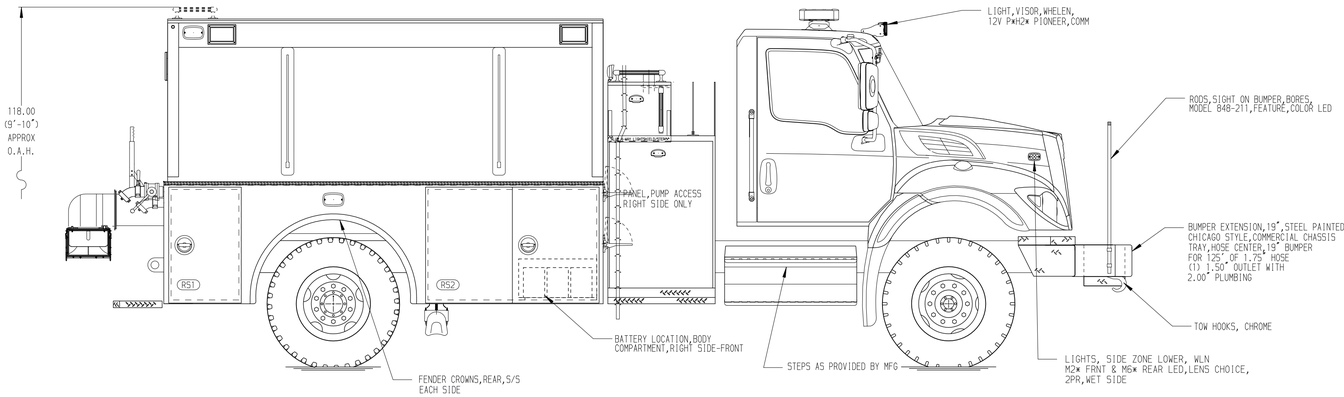

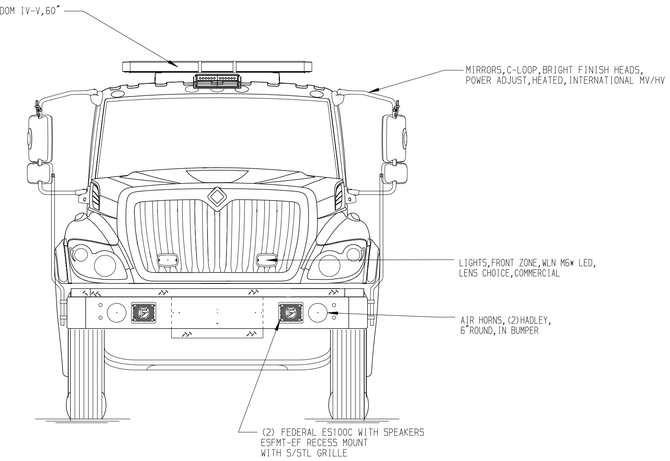

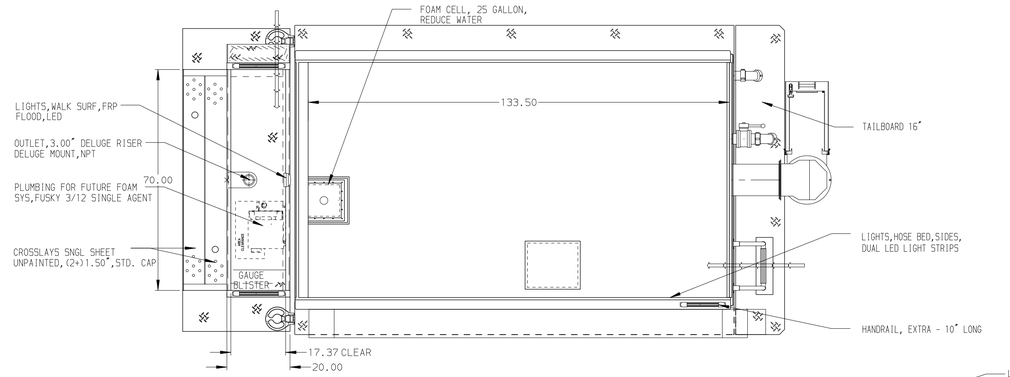

HOSEBED CAPACITY
BED 1
① 200 OF 2.5 DJP

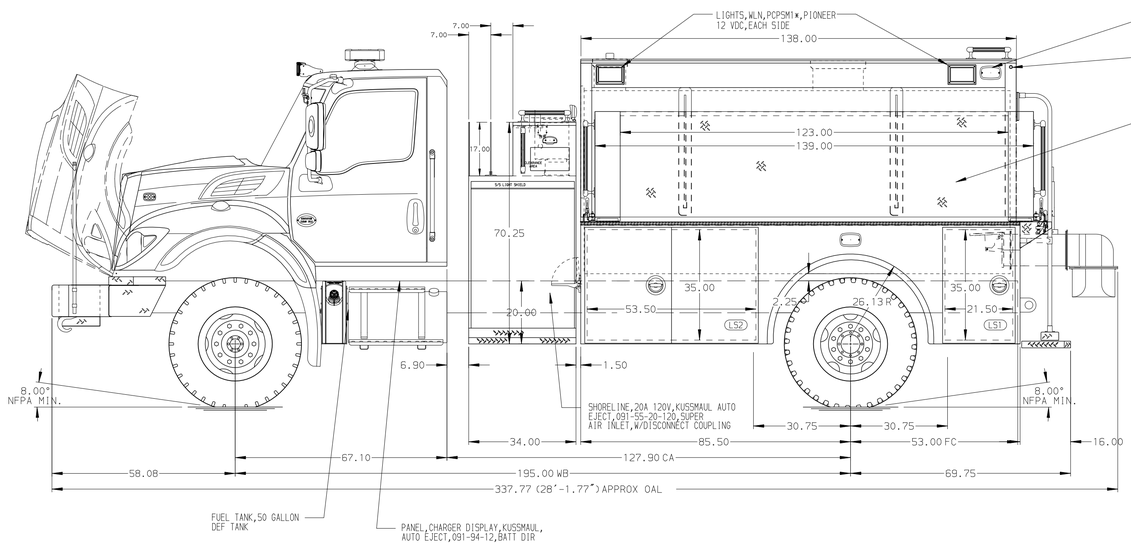

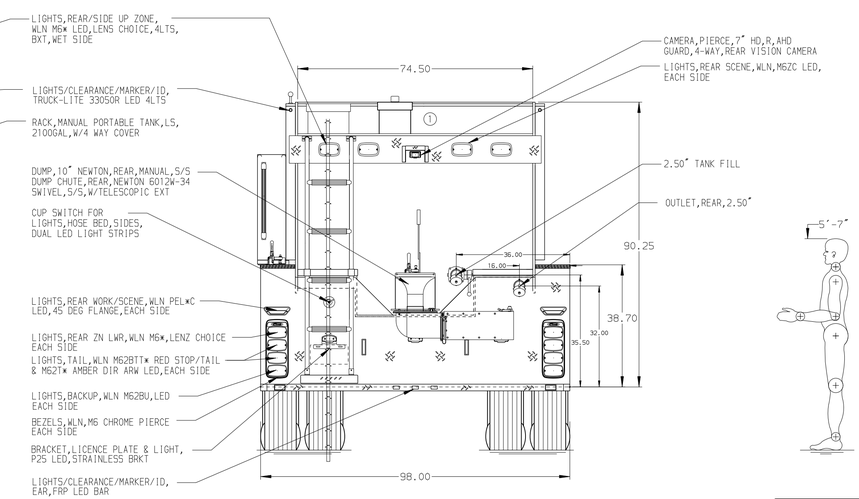

NFPA 1900
(2024)
COMPLIANT

ALUMINUM BODY

NOTE
DIMENSIONS SHOWN ARE APPROXIMATE AND ARE SUBJECT TO MINOR DEVIATIONS AS MAY OCCUR OR BE NECESSARY IN CONSTRUCTION.
MINOR DETAILS NOT SHOWN.

REV	DATE	BY	CH
V	21NOV24	VHO	AJA

CHASSIS DATA
MAKE: IHC
MODEL: HV607

Pierce MANUFACTURING INC.

TITLE: 1250GPM, 2100G TANK, 2075G WATER, 25G FOAM
138" WET SIDE TANKER, MUX

FOR: PIERCE FIELD UNIT
-

DWG NO.: 43044AD

JOB NO.	43044
SCALE	1:24
DATE	
DRAWN BY	VHO 230CT24
CHECKED BY	AJA 250CT24
SHEET SIZE	D
SHEET NO.	1 OF 1

View File Created 22-NOV-2024 06:55:17