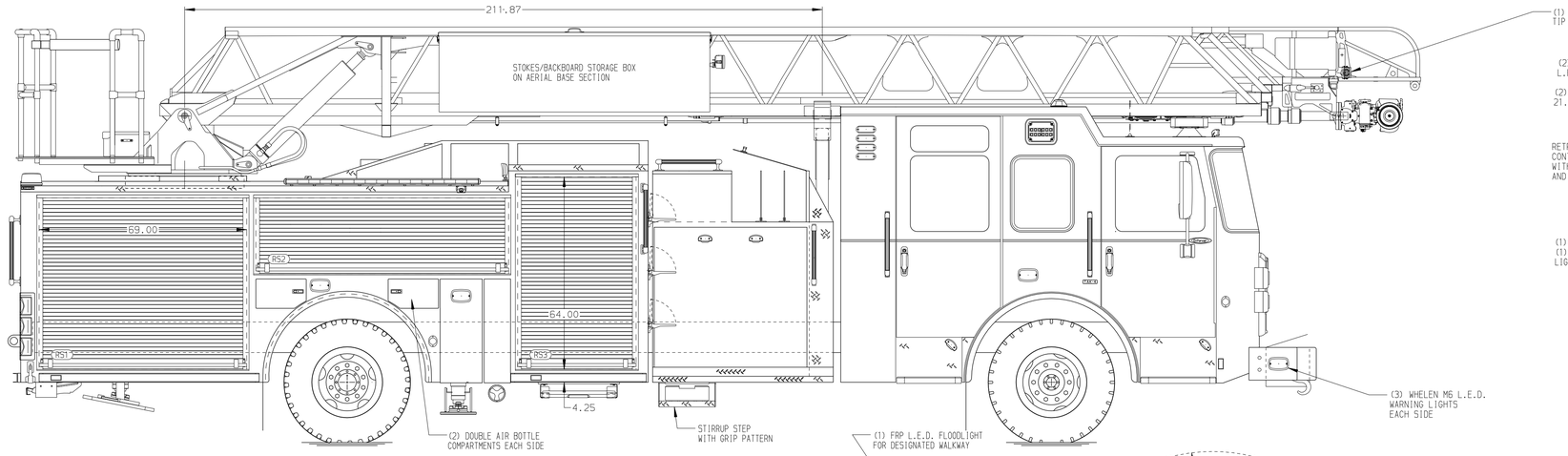

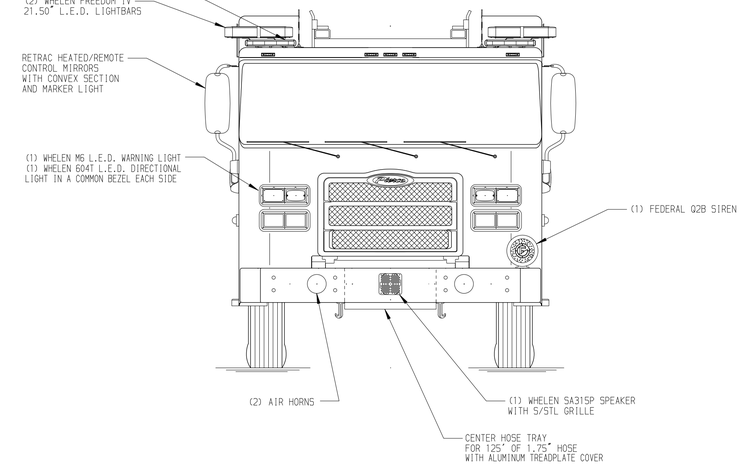

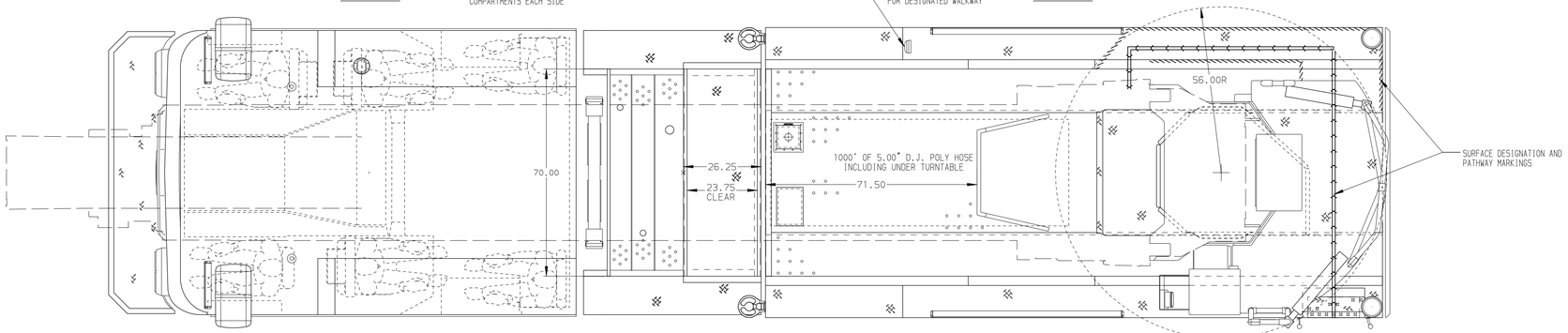

BODY	WATER TANK
107' ASL Aluminum Body	500 Gallon Poly Water Tank
COMPT,LEFT SIDE FRONT	Foam System
Full Height Rollup Forward	Plumbing for Future Husky Foam System
COMPT,LEFT SIDE REAR	Foam Cell
Full Height Rollup Rearward	20 Gallon Foam Cell, Non Reduced Water
COMPT,RIGHT SIDE FRONT	
Full Height Rollup Forward	
COMPT,RIGHT SIDE REAR	
Full Height Rollup Rearward	

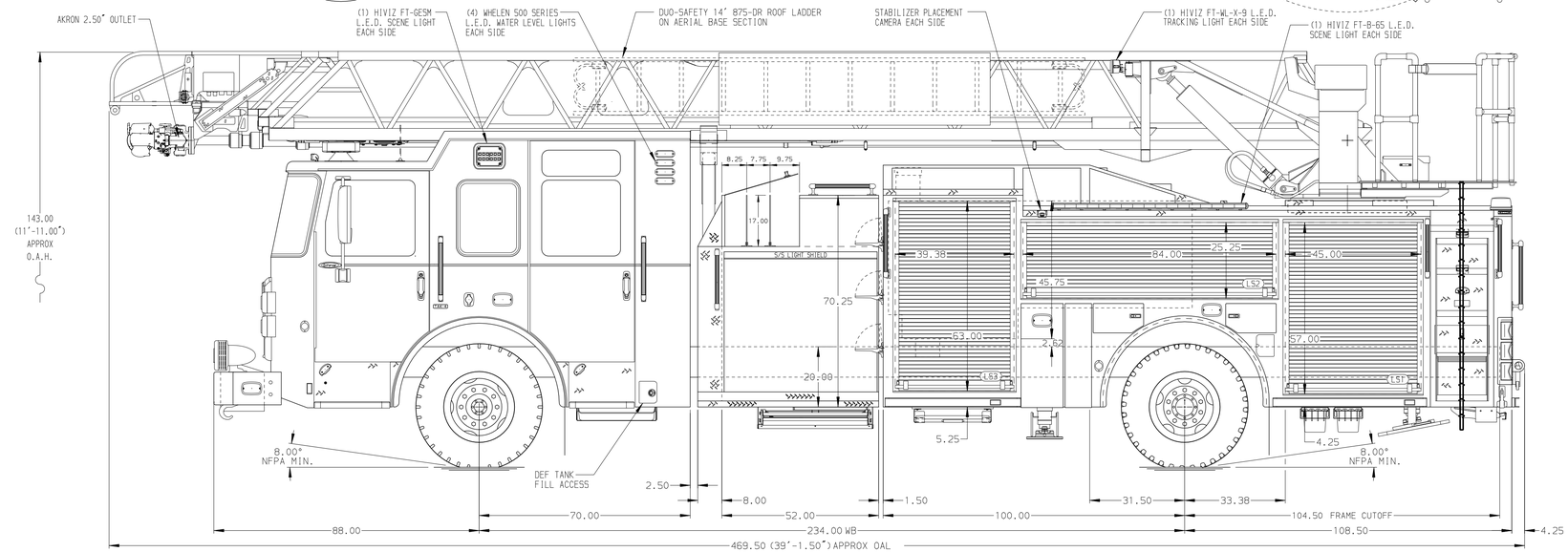

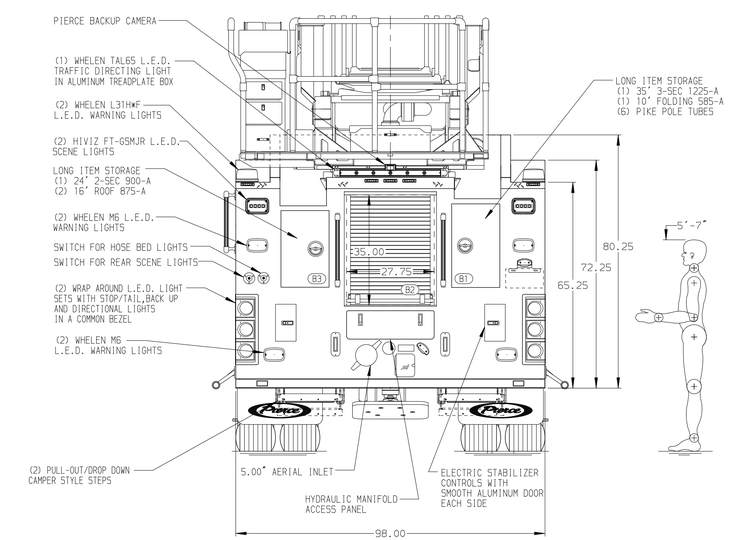

CHASSIS	CAB	AXLE,FRONT,CUSTOM	TRANSMISSION	PUMPHOUSE	CROSSLAYS,1.50"	SPEEDLAYS	SAFETY
Enforcer Chassis	7010 Enforcer Notched Cab	22,800 Lb TAK-4 Axle	ALlison 6th Gen, 4000 EVS P	52" Control Zone Side Mount	(2) 1.50" Standard Capacity	Speedlays Not Required	Side Roll and Frontal Impact Protection
ENGINE	BUMPER	AXLE,REAR		PUMP	CROSSLAYS,2.50"	GENERATOR	
510 HP Paccar MX13 Engine	19" Extended Painted Steel	33,500 Lb Meritor Axle		2000 GPM Waterous CSU	(1) 2.50" Standard Capacity	Generator Not Required	

NOTE

DIMENSIONS SHOWN ARE APPROXIMATE AND ARE SUBJECT TO MINOR DEVIATIONS AS MAY OCCUR OR BE NECESSARY IN CONSTRUCTION.
MINOR DETAILS NOT SHOWN.

1. SHORELINE RECEPTACLE WITH KUSSMAUL SUPER AUTO-EJECT LOCATED ON DRIVER SIDE OF THE CAB
2. AIR INLET WITH DISCONNECT COUPLING LOCATED FORWARD IN THE DRIVER SIDE STEPWELL
3. BATTERY CHARGER LOCATED BEHIND DRIVERS SEAT
4. BATTERY CHARGE INDICATOR LOCATED PER ORDER
5. ONE 1.50" OUTLET WITH 2.00" PIPING AND SWIVEL LOCATED IN CENTER BUMPER TRAY
6. SIX ADJUSTABLE SHELVES LOCATED IN COMPARTMENTS PER ORDER
7. THREE FLOOR MOUNTED SLIDE-OUT TRAYS LOCATED IN COMPARTMENTS PER ORDER
8. ONE CTECH CABINET LOCATED IN COMPARTMENT PER ORDER
9. ONE RECEPTACLE LOCATED IN COMPARTMENT PER ORDER
10. DUAL L.E.D. LIGHT STRIPS LOCATED IN COMPARTMENTS PER ORDER
11. TWO RECEPTACLE STRIPS LOCATED PER ORDER
12. ONE ALUMINUM SWING-OUT TOOLBOARD LOCATED IN COMPARTMENT PER ORDER
13. ONE VERTICAL PARTITION LOCATED IN COMPARTMENT PER ORDER
14. ONE BACK WALL MOUNTED PEGBOARD LOCATED IN COMPARTMENT PER ORDER
15. 1500 GPM HIGH FLOW WATERWAY
16. LIMITED RETRACTION NOT REQUIRED
17. MOUNTING PROVISIONS FOR FRONT INLET
18. RUNG LIGHTING ON AERIAL LADDER

REV	DATE	BY	CH
V	18NOV24	ANZ	AST

CHASSIS DATA
MAKE: PIERCE
MODEL: ENFORCER

Pierce MANUFACTURING INC.

TITLE: 107' ASCENDANT AERIAL LADDER AND BODY ASSEMBLY
FOR: TEN-8 FIRE & SAFETY, BRADENTON, FL
DWG NO.: 43286AD

JOB NO.	SCALE	DRAWN BY	DATE	CHECKED BY	DATE	SHEET SIZE	SHEET NO.
43286	1:24	ANZ	14OCT24	AST	18OCT24	D	1 OF 1

View File Created 02-DEC-2024 10:15:02