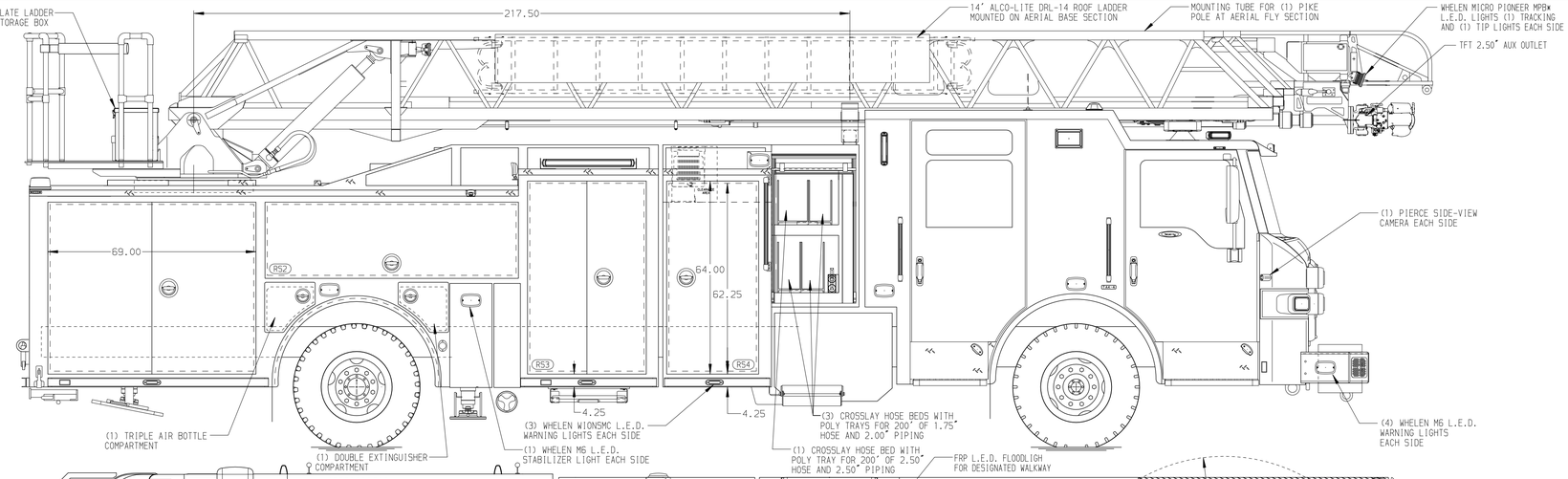

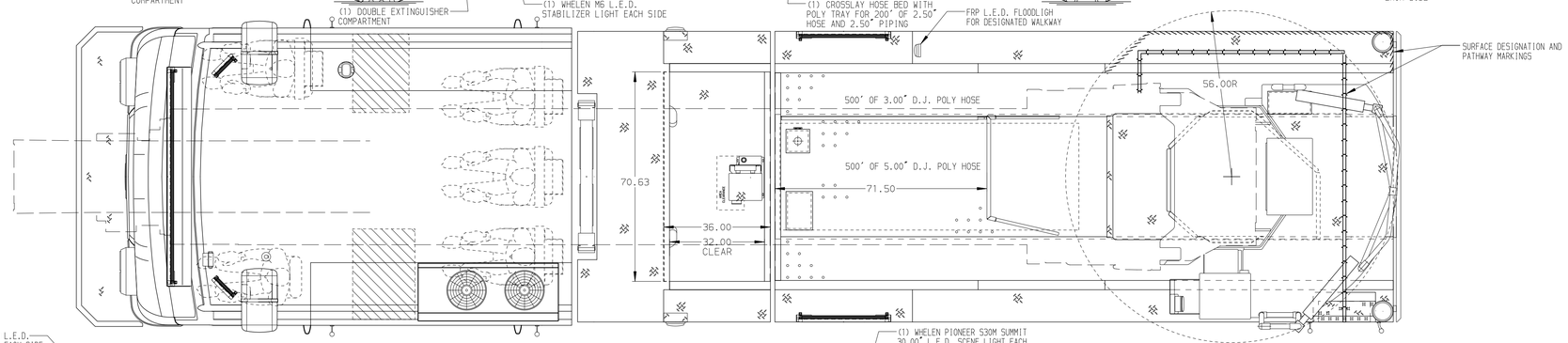

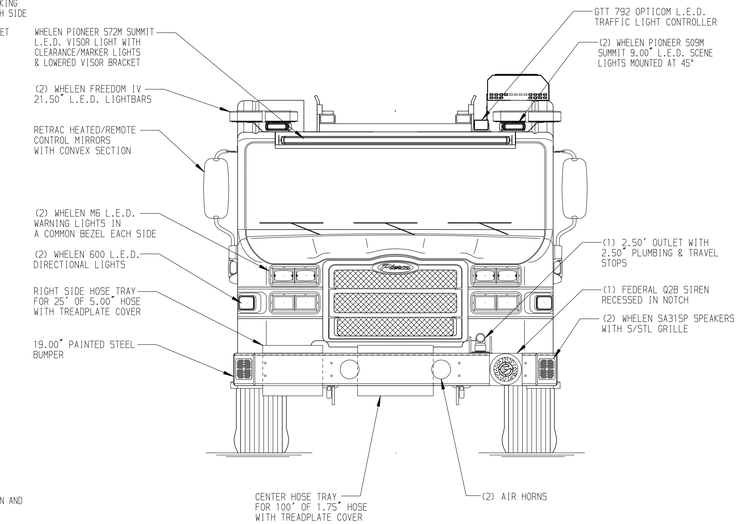

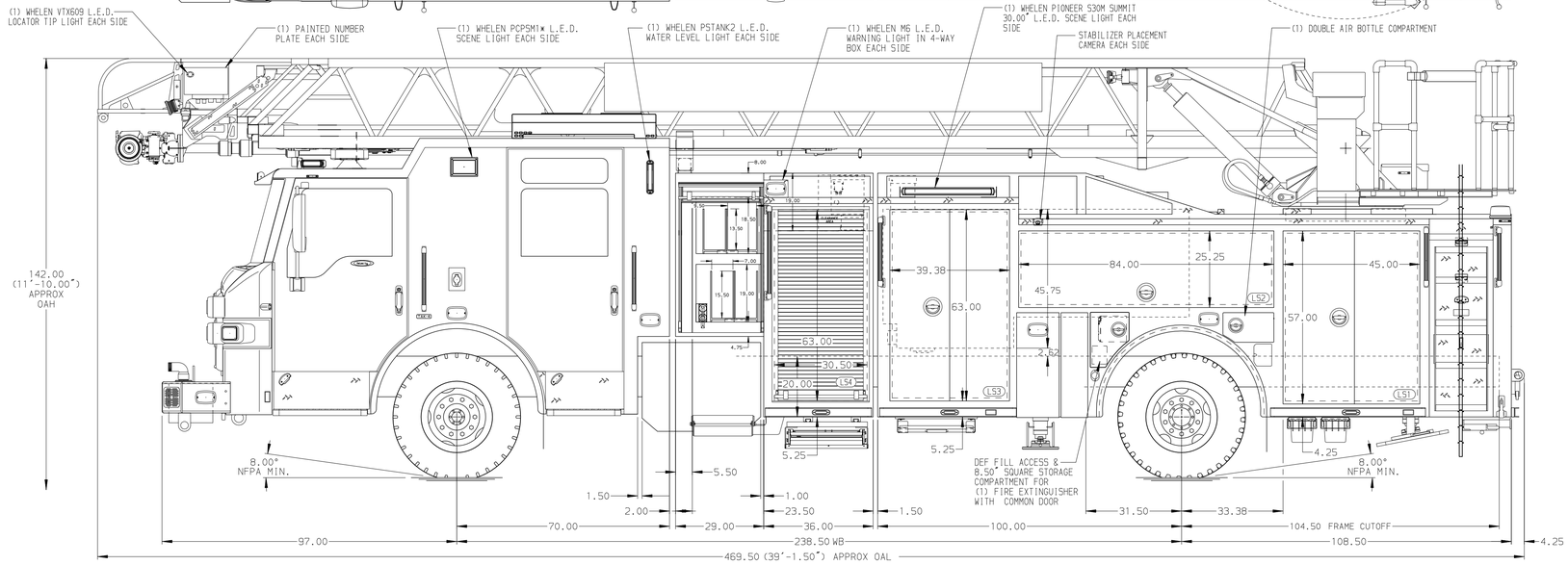

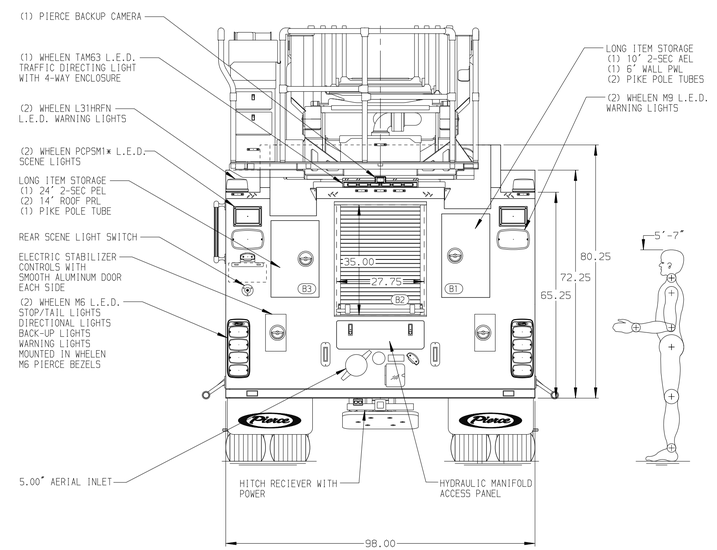

ALUMINUM BODY | MAXIMUM O.A.H. = 11'-11.00" (143.00") | SIDE ROLL AND FRONTAL IMPACT PROTECTION

NOTE

DIMENSIONS SHOWN ARE APPROXIMATE AND ARE SUBJECT TO MINOR DEVIATIONS AS MAY OCCUR OR BE NECESSARY IN CONSTRUCTION.
MINOR DETAILS NOT SHOWN.

1. NO LIMITED RETRACTION REQUIRED
2. DC POWER TO AERIAL TIP
3. SHORELINE RECEPTACLE WITH KUSSMAUL SUPER AUTO-EJECT & ACCESS MOUNTING PLATE LOCATED ON DRIVER SIDE OF THE CAB
4. AIR INLET/OUTLET WITH DISCONNECT FITTING LOCATED ON DRIVER SIDE PUMP PANEL
5. BATTERY CHARGER LOCATED BEHIND DRIVER SEAT
6. BATTERY CHARGE INDICATOR LOCATED NEAR DRIVER'S SEAT WITH BRACKET
7. ONE RIEKER MODEL 4120WW-12V INCLONOMETER LOCATED AT AERIAL BASE SECTION
8. TECNIQ 4-SECTION RUNG LIGHTING AT AERIAL DEVICE
9. ONE RECEPTACLE LOCATED IN EMS COMPARTMENT PER ORDER
10. LIFTING EYE ROPE RESCUE ATTACHMENT AT AERIAL TIP
11. 1500 GPM HIGH FLOW WATERWAY

REV	DATE	BY	CH
V	13AUG25	ANZ	CLM
V	24MAR25	ANZ	CLM
V	12MAR25	ANZ	CLM
V	23DEC24	ANZ	CLM

CHASSIS DATA: MAKE PIERCE; MODEL VELOCITY

Pierce MANUFACTURING INC.

TITLE: 107' ASCENDANT AERIAL LADDER AND BODY ASSEMBLY 520 GALLON TANK, 500 WATER / 20 FOAM

FOR: CITY OF CHESAPEAKE CHESAPEAKE, VA

DWG NO. 43333AD-SH1

JOB NO.	43333
SCALE	1:24
DATE	
DRAWN BY	ANZ
	23AUG24
CHECKED BY	CMS
	01OCT24
SHEET SIZE	D
SHEET NO.	1 OF 2

View File Created 16-OCT-2025 10:52:26