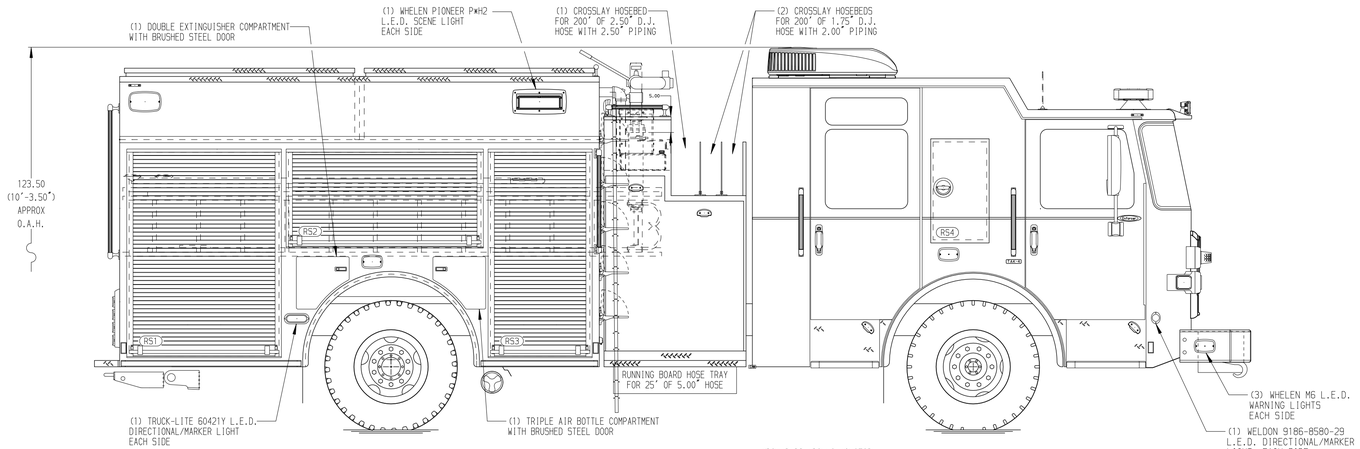

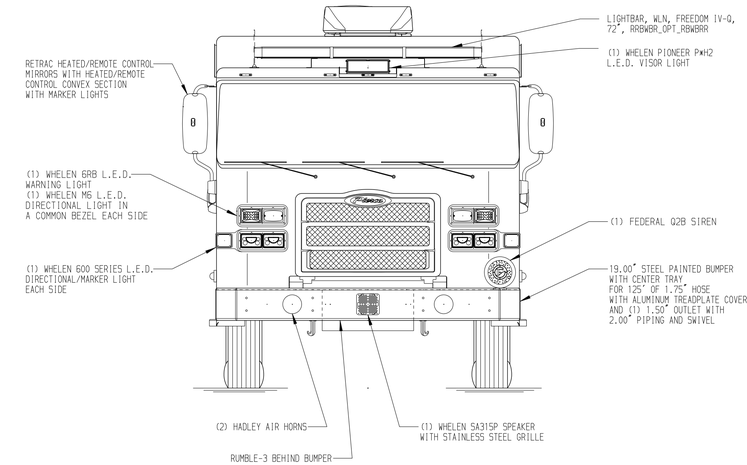

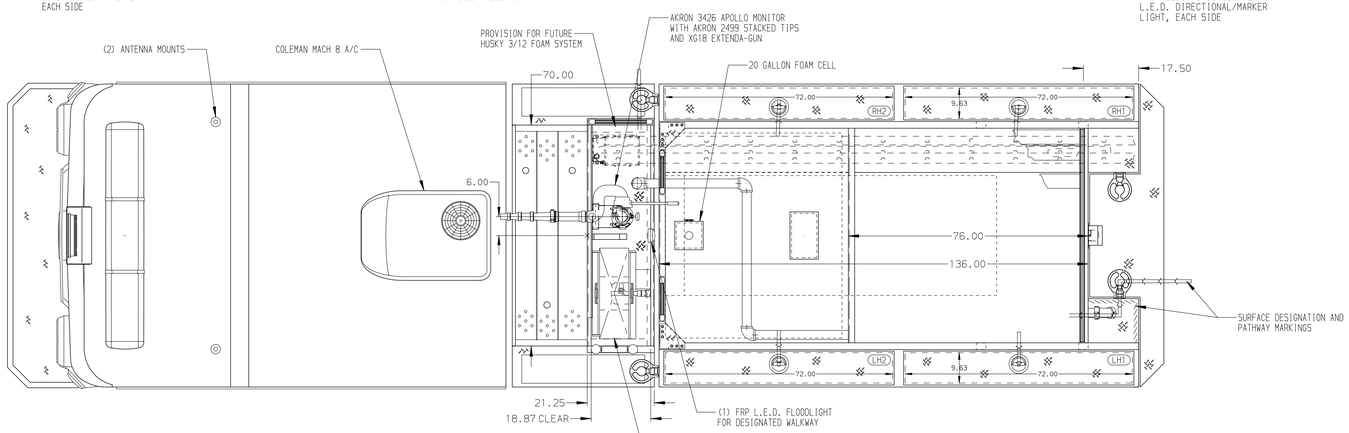

HOSEBED CAPACITIES

1. 250' OF 2.50" D.J. POLY HOSE
2. 250' OF 2.50" D.J. POLY HOSE
3. 1000' OF 5.00" D.J. POLY HOSE
4. EMPTY

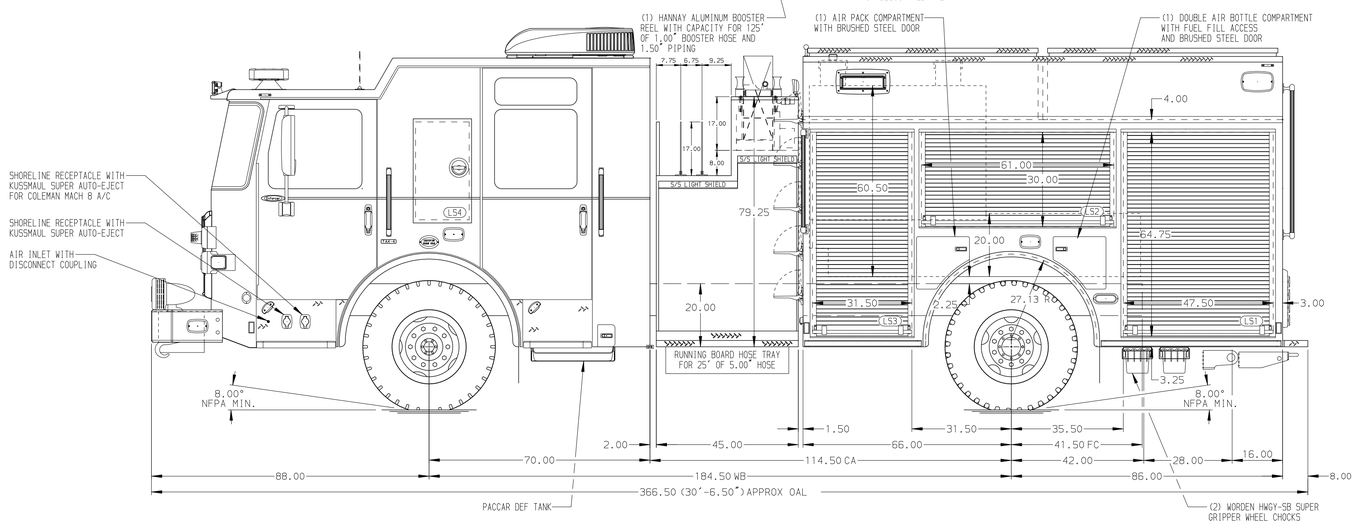

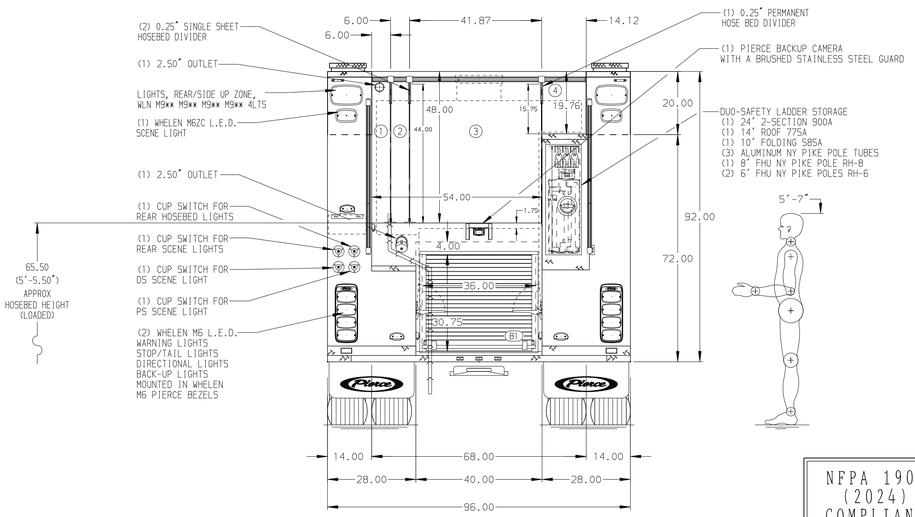

NFPA 1900 (2024) COMPLIANT

ALUMINUM BODY

NOTE

DIMENSIONS SHOWN ARE APPROXIMATE AND ARE SUBJECT TO MINOR DEVIATIONS AS MAY OCCUR OR BE NECESSARY IN CONSTRUCTION.
MINOR DETAILS NOT SHOWN.

REV	DATE	BY	CH
V	23JUL25	ADP	JAP

CHASSIS DATA — MAKE: PIERCE — MODEL: ENFORCER

Pierce MANUFACTURING INC.

TITLE: 1500GPM, 730G WATER, 20G FOAM 152" PUMPER, HARDWIRED

FOR: OKLAHOMA CITY FIRE DEPARTMENT OKLAHOMA CITY, OKLAHOMA

DWG NO.: 43375AD

JOB NO.	43375
SCALE 1:24	DATE
DRAWN BY VHQ	18APR25
CHECKED BY JAP	18APR25
SHEET SIZE D	SHEET NO. 1 OF 1

View File Created 24-JUL-2025 08:45:45