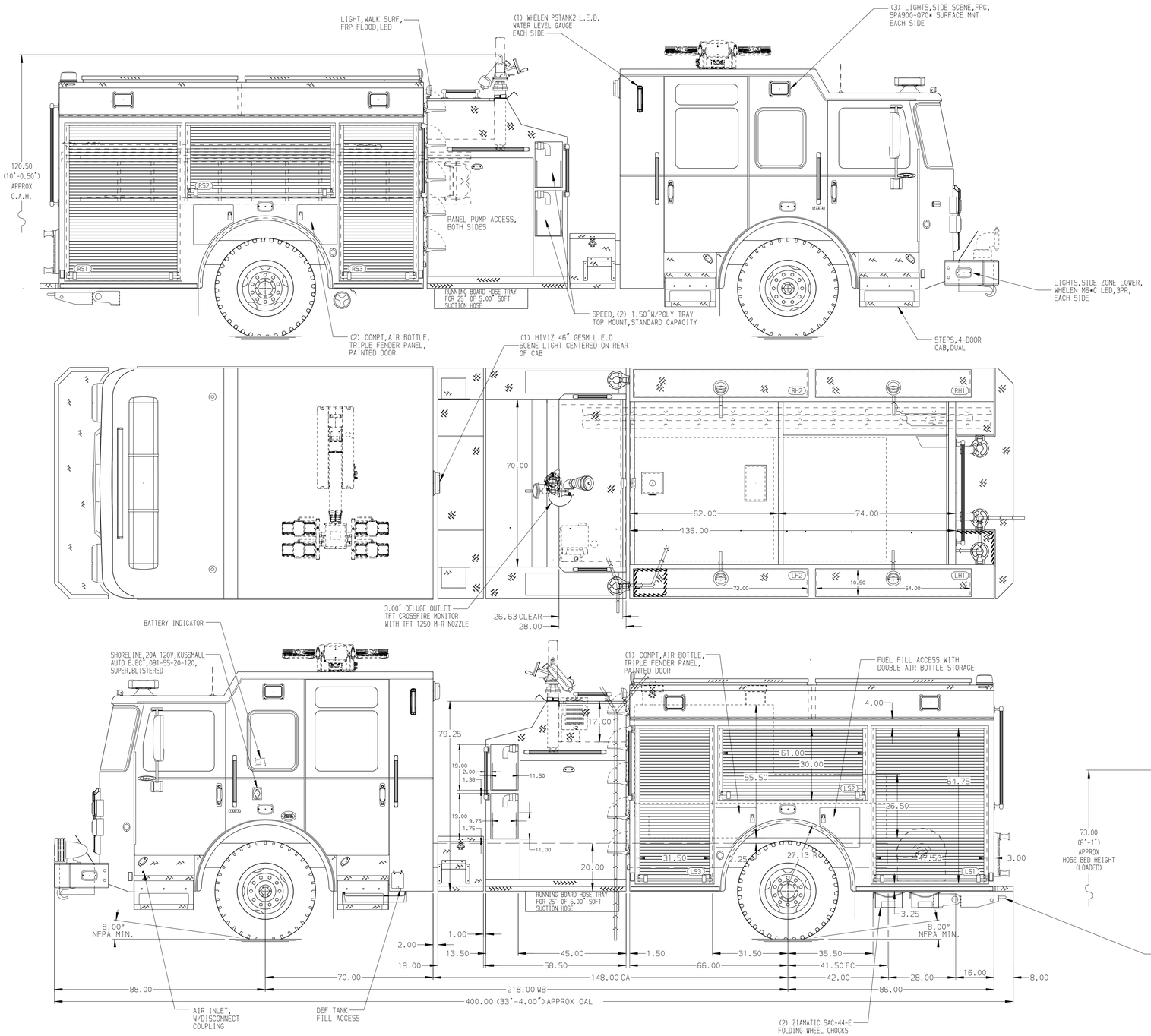

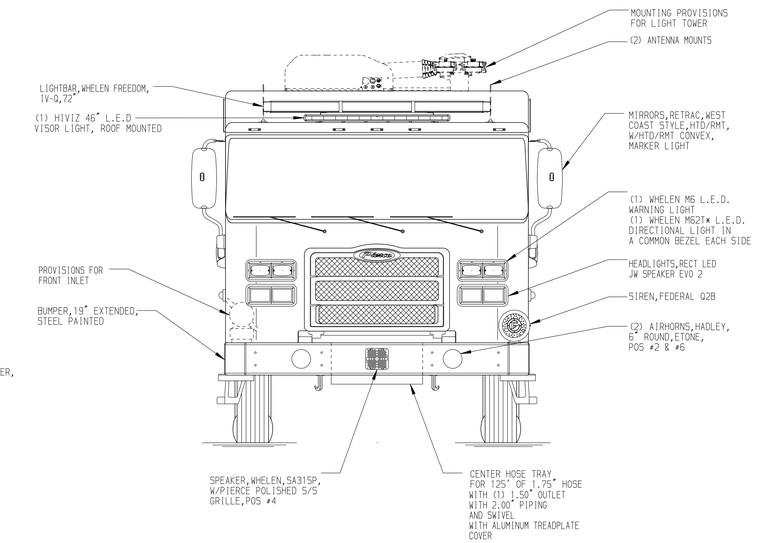

HOSEBED CAPACITIES

1. 1000' OF 5.00" D.J. POLY HOSE
2. 375'OF 3.00" D.J. POLY HOSE
3. 125'OF 3.00" D.J. POLY HOSE

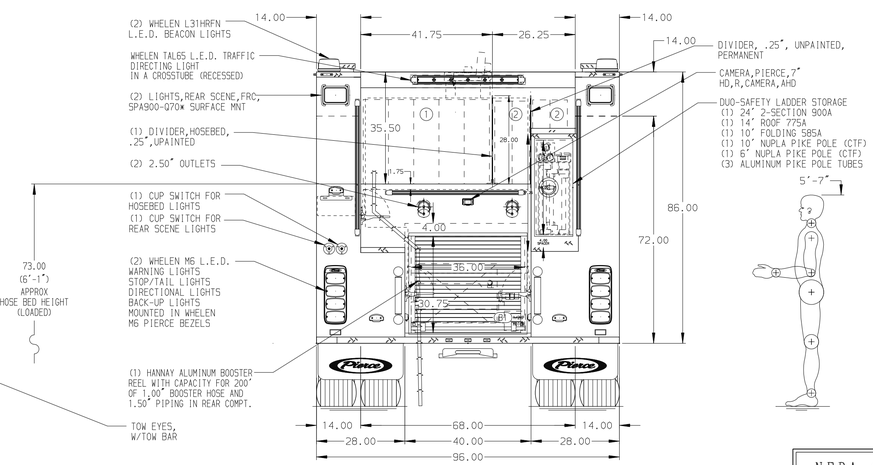

NFPA 1900 (2024) COMPLIANT

ALUMINUM BODY

Pierce MANUFACTURING INC.

NOTE

DIMENSIONS SHOWN ARE APPROXIMATE AND ARE SUBJECT TO MINOR DEVIATIONS AS MAY OCCUR OR BE NECESSARY IN CONSTRUCTION.
MINOR DETAILS NOT SHOWN.

1. SHORELINE RECEPTACLE WITH KUSSMAUL SUPER AUTO-EJECT LOCATED ON DRIVER SIDE OF THE CAB
2. BATTERY CHARGER LOCATED BEHIND DRIVER'S SEAT
3. PLUMBING FOR FUTURE HUSKY3/12 FOAM SYSTEM PER ORDER

REV	DATE	BY	CH
1	10JAN24	RHU	CCS
2	31OCT24	VHO	JAP
3	13SEP24	BTH	KLH

CHASSIS DATA: MAKE PIERCE; MODEL SABER FR

TITLE: 1500GPM, 750G TANK, 730G WATER, 20G FOAM 152" PUMPER, HARDWIRED

FOR: MIDDLE ISLAND FD, MIDDLE ISLAND, NEW YORK

DWG NO. 43412AD

JOB NO.	43412
SCALE	1:24
DATE	
DRAWN BY	BTH
DATE	29AUG24
CHECKED BY	KLH
DATE	03SEP24
SHEET SIZE	D
SHEET NO.	1 OF 1

View File Created 10-JAN-2025 10:44:10