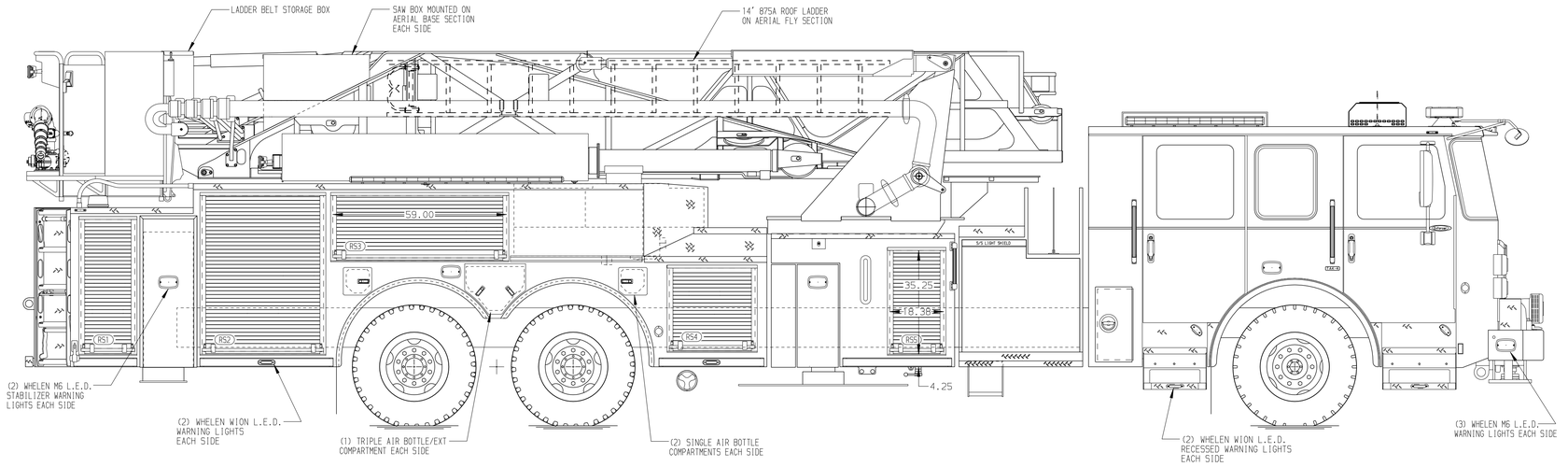

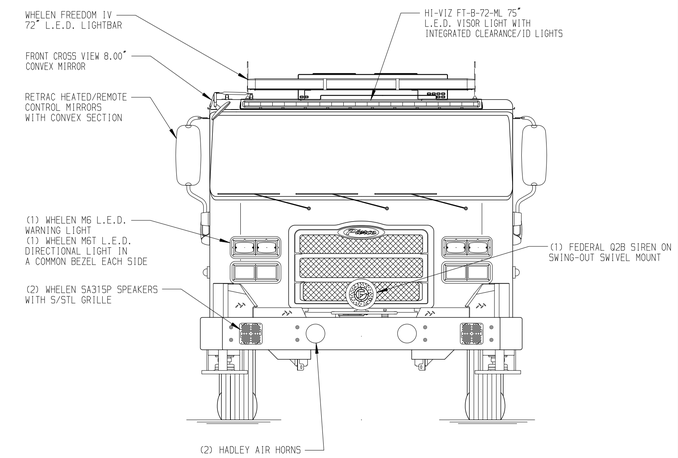

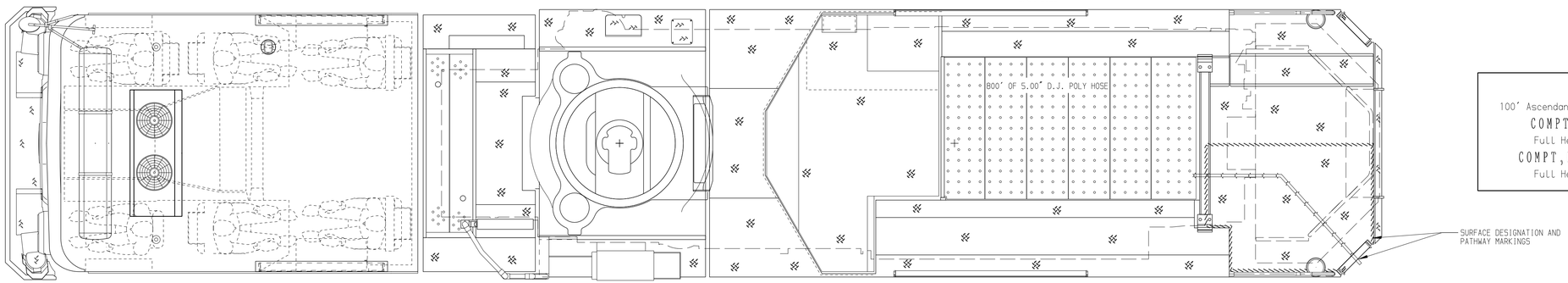

BODY	WATER TANK
100' Ascendant Aerial Tower Alum Body	300 Gallon Poly Water Tank
COMPT,DRIVER SIDE	Foam System
Full Height Rollup Doors	Foam System Not Required
COMPT,PASSENGER SIDE	Foam Cell
Full Height Rollup Doors	Foam Cell Not Required

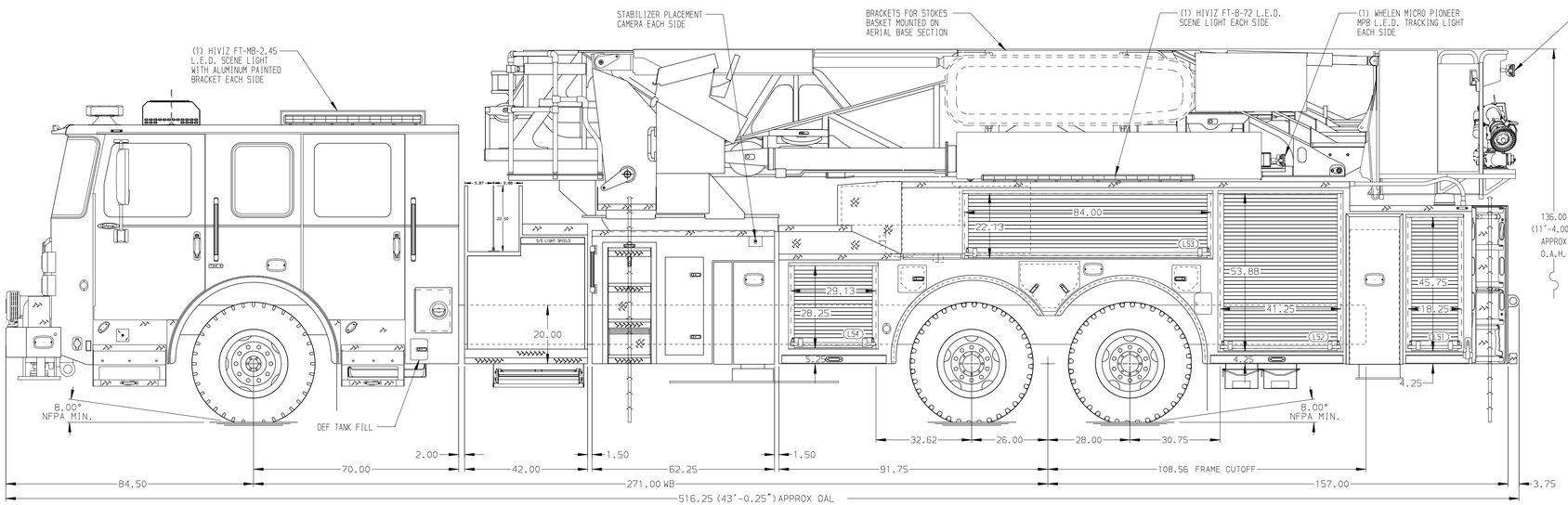

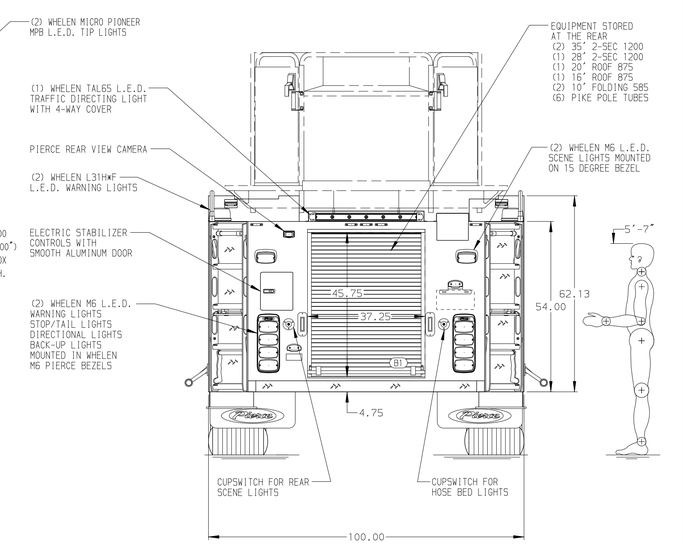

CHASSIS	CAB	AXLE,FRONT,CUSTOM	TRANSMISSION	PUMPHOUSE	CROSSLAYS,1.50"	SPEEDLAYS	SAFETY
Enforcer Chassis	7000 Enforcer Cab	24,000 Lb TAK-4 Axle	ALLison 6th Gen, 4500 EVS P	42" Control Zone Side Mount	(2) 1.50", 200' of 1.75" Hose	Speedlays Not Required	Side Roll and Frontal Impact Protection
ENGINE	BUMPER	AXLE,REAR		PUMP	CROSSLAYS,2.50"	GENERATOR	
510 HP Paccar MX13 Engine	15" Extended Painted Steel	52,640 Lb TAK-4 T3 Axle		2000 GPM Waterous S100	2.50" Crosslay Not Required	Generator Not Required	

CUSTOMER APPROVAL

APPROVED BY: _____

DATE: _____

Pierce MANUFACTURING INC.

NOTE

DIMENSIONS SHOWN ARE APPROXIMATE AND ARE SUBJECT TO MINOR DEVIATIONS AS MAY OCCUR OR BE NECESSARY IN CONSTRUCTION.
MINOR DETAILS NOT SHOWN.

1. SHORELINE RECEPTACLE WITH KUSSMAUL SUPER AUTO-EJECT LOCATED ON DRIVER SIDE FRONT CORNER OF THE CAB
2. AIR INLET WITH DISCONNECT COUPLING IN A RECESSED ALUMINUM TREADPLATE BOX IN THE DRIVER SIDE STEPWELL
3. BATTERY CHARGER LOCATED IN CAB BEHIND DRIVER'S SEAT
4. BATTERY CHARGER INDICATOR LOCATED ON DRIVER'S SEAT RISER
5. FIVE ADJUSTABLE SHELVES LOCATED IN COMPARTMENTS PER ORDER
6. FOUR FLOOR MOUNTED SLIDE-OUT TRAYS LOCATED IN COMPARTMENTS PER ORDER
7. DUAL LIGHT STRIPS LOCATED IN COMPARTMENTS PER ORDER
8. ONE SLIDE-OUT ALUMINUM TOOLBOARD LOCATED IN COMPARTMENT PER ORDER
9. DC POWER TO AERIAL TIP
10. 3-in-1 LYFECOMBO BRACKETS AT AERIAL BASKET
11. TECNIQ 5-SECTION RUNG LIGHTING ON AERIAL LADDER
12. TWO WHELEN PSL1B L.E.D. LIGHTS UNDER BASKET CORNER STEPS

REV	DATE	BY	CH
1	24JUN25	ANZ	AST

CHASSIS DATA	
MAKE	PIERCE
MODEL	ENFORCER
TITLE	100' ASCENDANT AERIAL TOWER AND BODY ASSEMBLY –
FOR	PIERCE STOCK APPLETON, WI
DWG NO.	43479AD

JOB NO.	43479
SCALE	1:24
DATE	
DRAWN BY	ANZ
	10FEB25
CHECKED BY	AST
	12FEB25
SHEET SIZE	D
SHEET NO.	1 OF 1

View File Created 24-JUN-2025 09:05:22