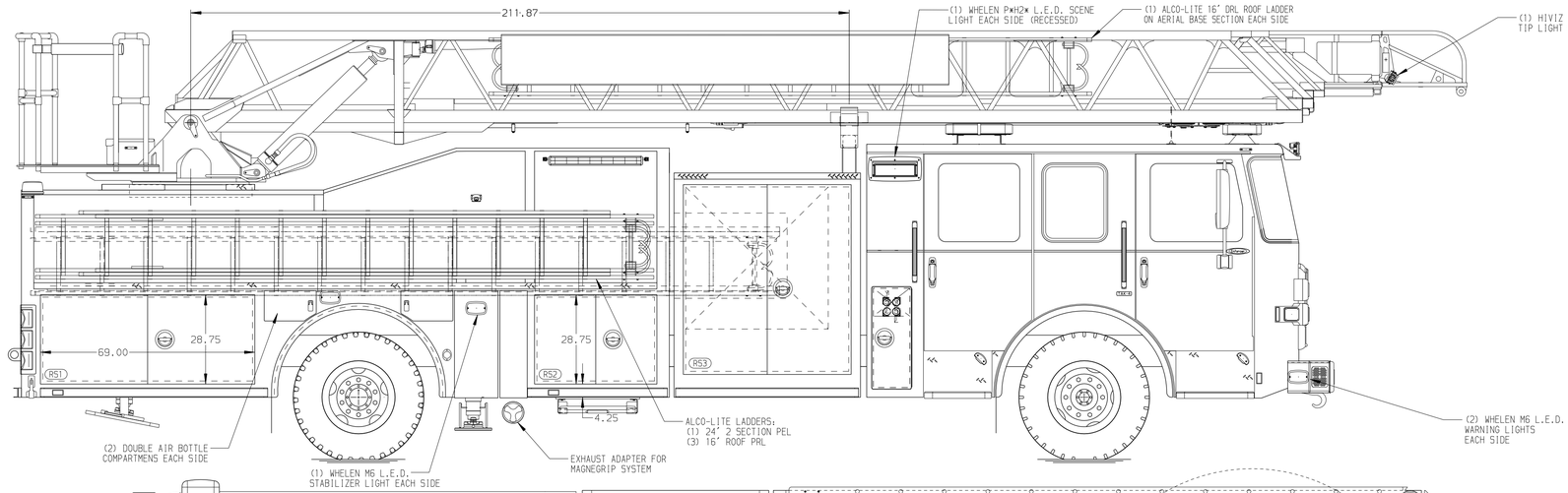

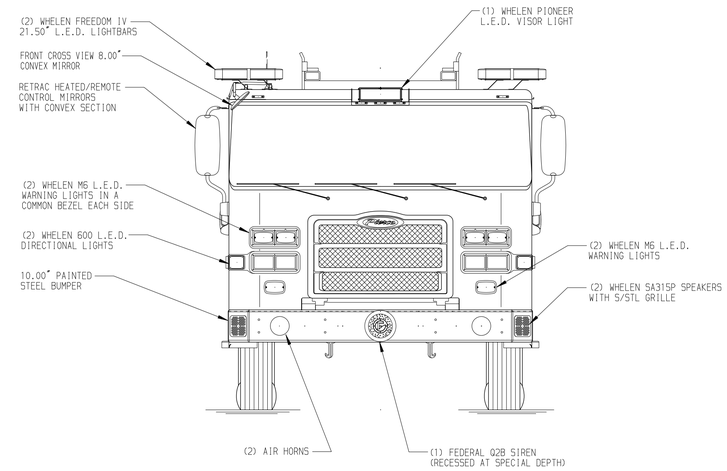

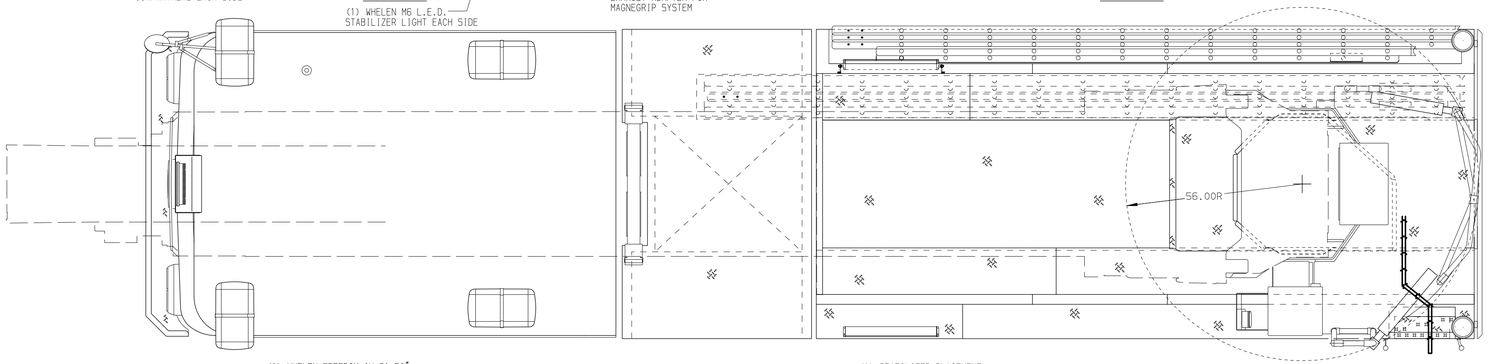

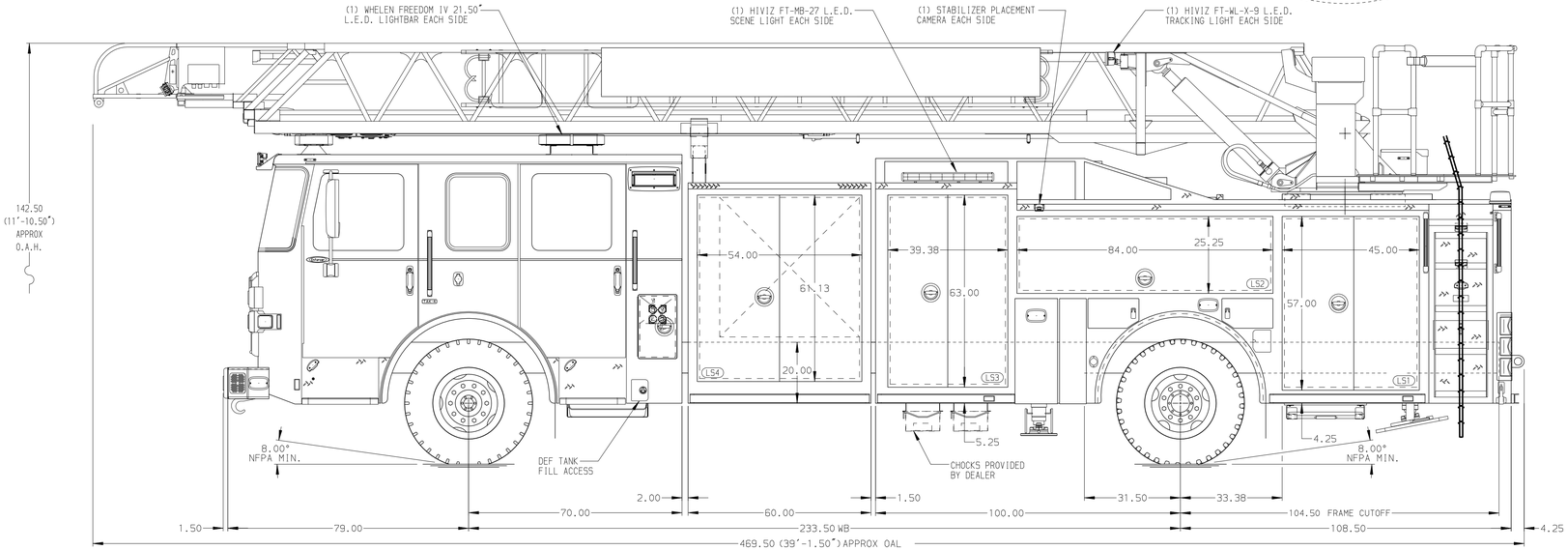

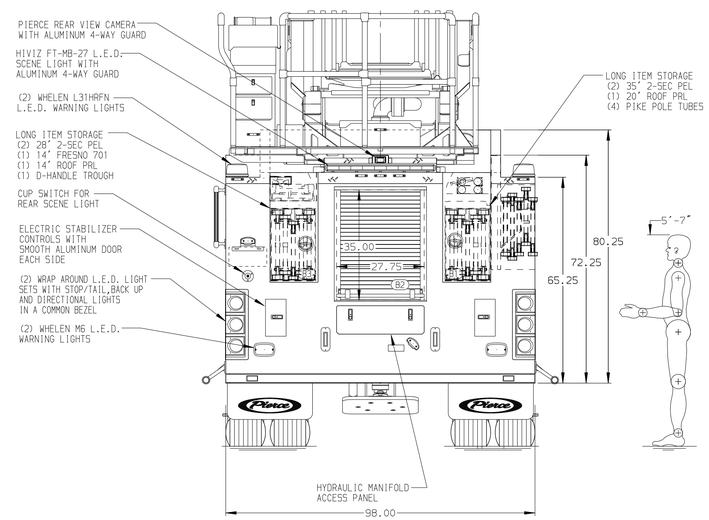

ALUMINUM BODY | SIDE ROLL AND FRONTAL IMPACT PROTECTION

NOTE

DIMENSIONS SHOWN ARE APPROXIMATE AND ARE SUBJECT TO MINOR DEVIATIONS AS MAY OCCUR OR BE NECESSARY IN CONSTRUCTION.
MINOR DETAILS NOT SHOWN.

1. NO LIMITED RETRACTION REQUIRED
2. AKRON 1495 LADDER PIPE WITH 497 MOUNTING BRACKET MOUNTED AT PICKUP
3. SHORELINE RECEPTACLE WITH KUSSMAUL SUPER AUTO-EJECT LOCATED ON DRIVER SIDE OF THE CAB
4. AIR INLET WITH DISCONNECT COUPLING LOCATED IN THE DRIVER SIDE STEPWELL
5. BATTERY CHARGER LOCATED BEHIND DRIVER SEAT
6. BATTERY CHARGE INDICATOR LOCATED ON THE DRIVER'S SEAT RISER
7. FIVE ADJUSTABLE SHELVES LOCATED IN COMPARTMENTS PER ORDER
8. FOUR FLOOR MOUNTED SLIDE-OUT TRAYS LOCATED IN COMPARTMENTS PER ORDER
9. NON-RAISED AERIAL PEDESTAL
10. LIFTING EYE ROPE RESCUE ATTACHMENT AT AERIAL TIP
11. DC POWER TO AERIAL TIP

REV	DATE	BY	CH
V	12JUN25	ANZ	AST
V	09MAY25	ANZ	JKR
V	22OCT24	ANZ	AST
V	26SEP24	ANZ	JLO

CHASSIS DATA
MAKE: PIERCE
MODEL: ENFORCER

CUSTOMER APPROVAL
APPROVED BY: _____
DATE: _____

Pierce MANUFACTURING INC.

TITLE: 107 ASCENDANT AERIAL LADDER & BODY ASSEMBLY
NO PUMP/NO TANK

FOR: PIERCE FIELD UNIT
APPLETON, WI

DWG NO. 43494AD

JOB NO.	43494
SCALE	1:24
DATE	
DRAWN BY	ANZ
17SEP24	
CHECKED BY	JLO
18SEP24	
SHEET SIZE	D
SHEET NO.	1 OF 1

View File Created 09-SEP-2025 13:53:05