PASSENGER'S SIDE COMPARTMENTS CONTAIN THE FOLLOWING:

COMPARTMENT P1 CONTAINS:
- (1) FLOOR MOUNTED TRAY
- (1) STD DEPTH ADJ SHELF
-

COMPARTMENT P2 CONTAINS:
- (1) VERTICAL COMPARTMENT DIVIDER
- (1) CIRCUIT BREAKER PANEL
- (1) NIGHT SCAN CONTROLLER
- (1) GENERATOR METER PANEL
- (1) STD DEPTH ADJ SHELF
-

COMPARTMENT P3 CONTAINS:
- (1) 1/2 DEPTH ADJ SLIDE OUT/TILT TRAY
- (1) FLOOR MOUNTED TRAY
- (1) REAR WALL COMPARTMENT DIVIDER
- (1) 1/2 DEPTH ADJ SLIDE OUT TRAY
- (4) POLY TOOL BOXES
-
-

COMPARTMENT P4 CONTAINS:
- (1) 1/2 DEPTH ADJ SLIDE OUT/TILT TRAY
- (1) FLOOR MOUNTED TRAY
- (1) CAB LIFT CONTROLLER
- (1) 2-WAY ADJ SLIDE OUT TRAY
- (1) ELECTRIC CABLE REEL W/200' OF 10/3 YELLOW CORD & CAPTIVE ROLLER
-

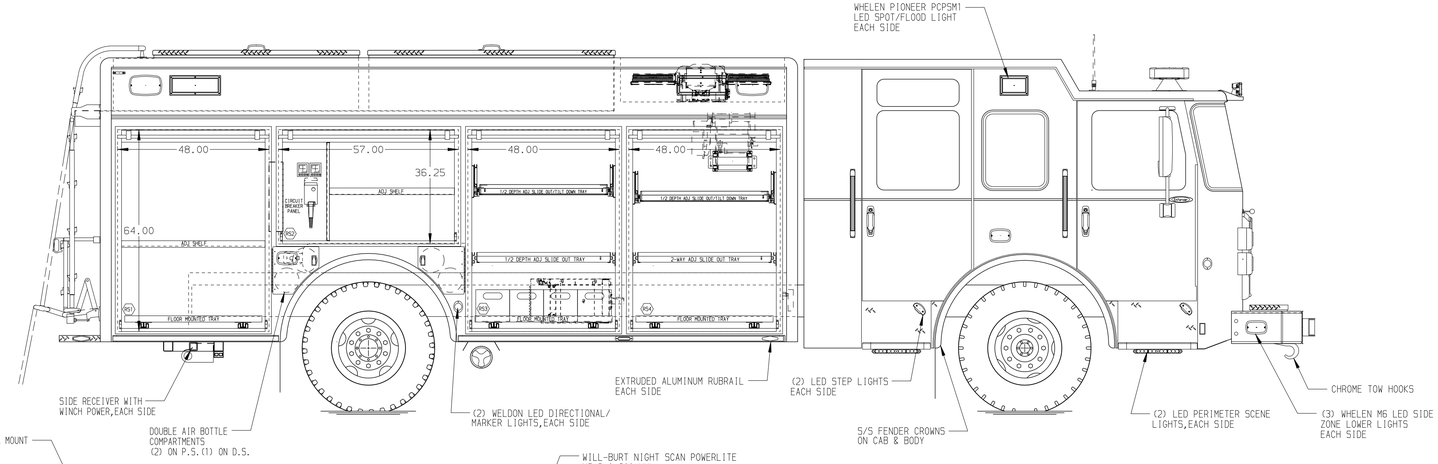

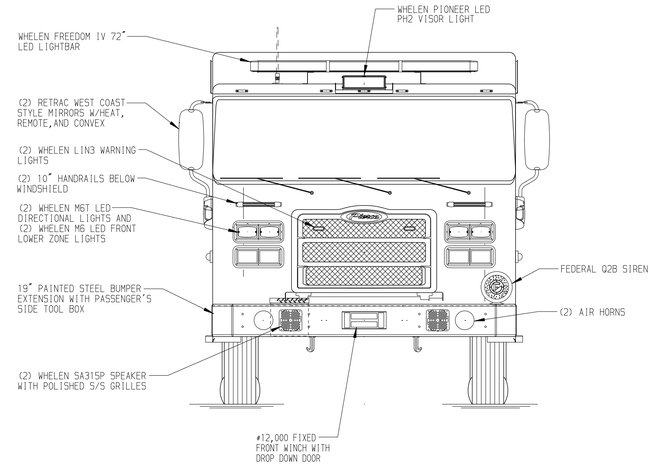

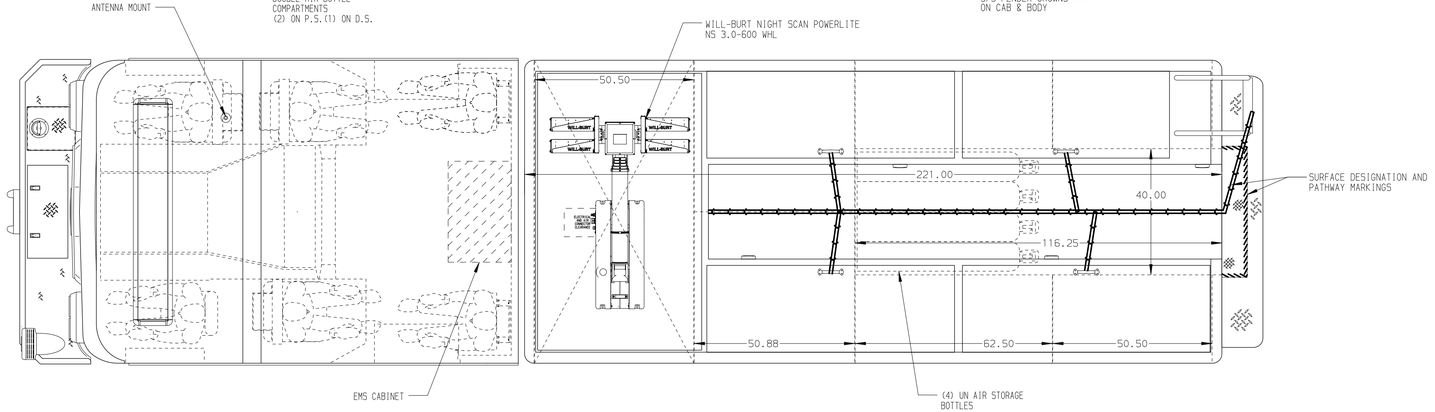

REAR COMPARTMENT CONTAINS THE FOLLOWING:

COMPARTMENT R1 CONTAINS:
- (1) 110"DP SLIDE OUT TRAY
- (1) RACK FOR 8 SCBA BOTTLES
- (1) STOKES BASKET RACK
-

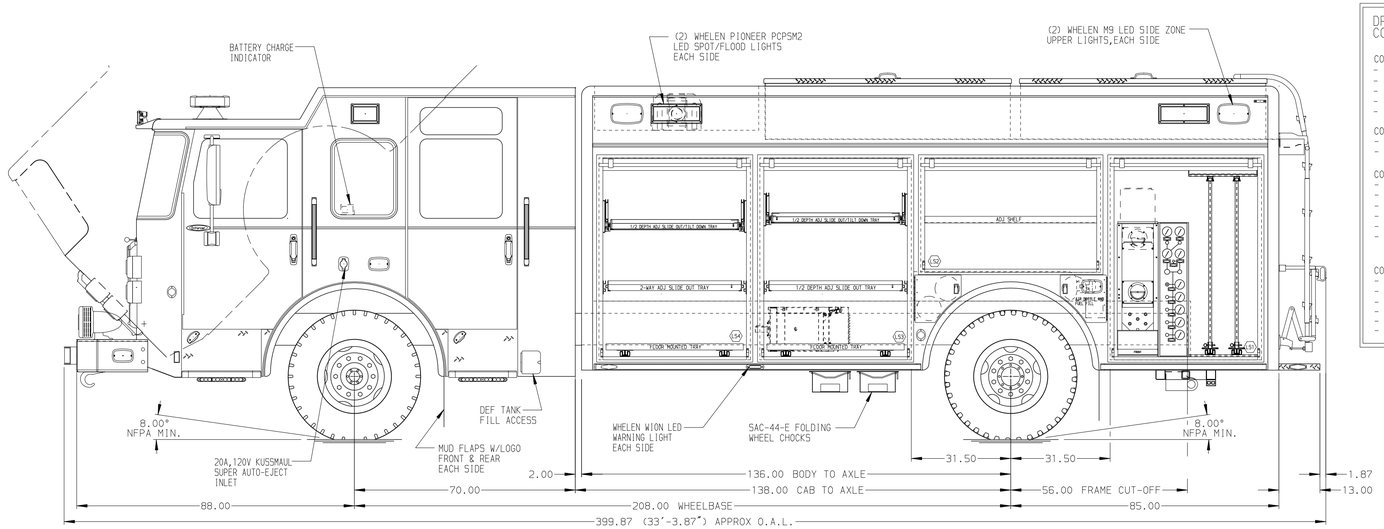

DRIVER'S SIDE COMPARTMENTS CONTAIN THE FOLLOWING:

COMPARTMENT D1 CONTAINS:
- (2) STD DEPTH ADJ SLIDE OUT TOOLBOARDS
- (1) CASCADE SYSTEM CONTROL PANEL
- (1) "SPACESAVER"2-BOTTLE FILL ENCLOSURE
-
-

COMPARTMENT D2 CONTAINS:
- (1) STD DEPTH ADJ SHELF
-

COMPARTMENT D3 CONTAINS:
- (1) 1/2 DEPTH ADJ SLIDE OUT/TILT TRAY
- (1) 1/2 DEPTH ADJ SLIDE OUT TRAY
- (1) FLOOR MOUNTED TRAY
- (1) REAR WALL COMPARTMENT DIVIDER
-
-

COMPARTMENT D4 CONTAINS:
- (1) 1/2 DEPTH ADJ SLIDE OUT/TILT TRAY
- (1) 2-WAY ADJ SLIDE OUT TRAY
- (1) FLOOR MOUNTED TRAY
-
-
-

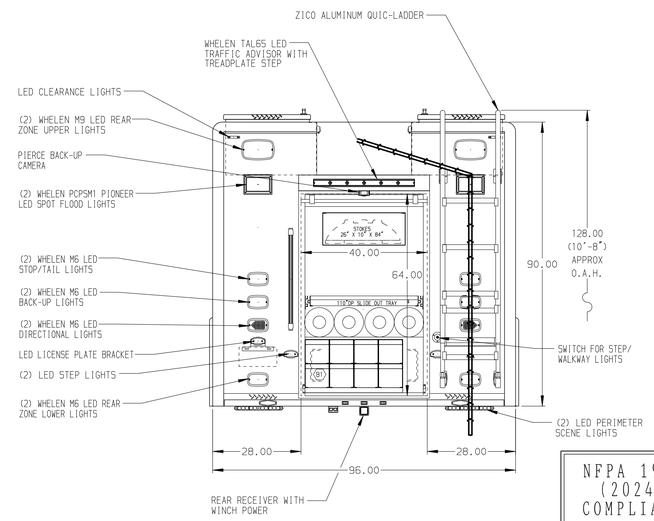

NFPA 1900 (2024) COMPLIANT

NOTE

DIMENSIONS SHOWN ARE APPROXIMATE AND ARE SUBJECT TO MINOR DEVIATIONS AS MAY OCCUR OR BE NECESSARY IN CONSTRUCTION.
MINOR DETAILS NOT SHOWN.

NOTES:
1. FLOOR IN CAB AND CREW CAB TO BE PADDED RUBBER
2. ELASTIC PULL STRAPS ON ALL BODY ROLL UP DOORS
3. PIERCE LED LIGHT STRIPS IN ALL BODY AND HATCH COMPARTMENTS
4. KUSSMAUL 60 AMP BATTERY CHARGER LOCATED BEHIND THE DRIVER'S SEAT
5. S/S GUARDS ON ALL BODY ROLL-UP DOORS
6. HARRISON 25kW SINGLE PHASE PTO DRIVEN GENERATOR WITH SPLASH GUARD LOCATED BETWEEN THE FRAME RAILS

CLEAR DOOR WIDTH KEY

AMDOR ROLL UP DOORS:	-2 1/4"
GORTITE ROLL UP DOORS:	-2 1/2"
PIERCE DOUBLE LAP DOORS:	-4 1/4"
PIERCE LIFT-UP LAP DOORS:	-1 1/2"

(EX: 60"F-F - 2 1/4"= 57 3/4" CLEAR)
(F-F)= FRAME TO FRAME

REV	DATE	BY	CH
1	17APR25	SHD	SJS
2	27FEB25	DHE	AST
3	220CT24	DHE	AST
4	090CT24	DHE	GFI

CHASSIS DATA
MAKE: PIERCE
MODEL: EN7010

CUSTOMER APPROVAL
APPROVED BY: _____
DATE: _____

Pierce MANUFACTURING INC.

TITLE: HEAVY DUTY RESCUE NON-WALKIN
FOR: WOODBRIDGE RURAL FIRE PROTECTION DISTRICT BID #928
GOLDEN STATE FIRE APPARATUS, INC RYAN WRIGHT
DWG NO. 43507AD

JOB NO.	43507
SCALE 1:24	DATE
DRAWN BY DHE	18SEP24
CHECKED BY GFI	19SEP24
SHEET SIZE D	SHEET NO. 1 OF 1

View File Created 18-APR-2025 07:15:46