PUMPER

BODY
Long Aluminum 2nd Gen Pumper

CHASSIS
Saber FR Chassis

CHASSIS

AXLE,FRONT,CUSTOM
20,000 Lb D-2000F Dana Axle

AXLE,REAR
27,000 Lb S26-190 Dana Axle

ENGINE
510 HP Paccar MX13 Engine

TRANSMISSION
Allison 6th Gen, 4000 EVS P

BUMPER
19" Extended Steel Painted

CAB
7010 Enforcer FR Cab

BODY

WATER TANK
1000 Gallon New York Style Poly Tank

COMPT,PUMPER,REAR
30.75" FF Rollup Rear Compt

COMPT,PUMPER,LEFT SIDE
161" Rollup Full Height Front & Rear FDLER

COMPT,PUMPER,RIGHT SIDE

FIRE SUPPRESSION

PUMPHOUSE
45" Control Zone Side Mount

PUMP
1500 GPM Waterous CSU

CROSSLAYS,1.50"
(2) 1.50" Standard Capacity

CROSSLAYS,2.50"
(1) 2.50" Standard Capacity

SPEEDLAYS
Speedlays Not Required

GENERATOR
Generator Not Required

Foam System
Provisions for Future Husky 3/12

Foam Cell
20 Gallon Foam Cell

Side Roll and Frontal Impact Protection

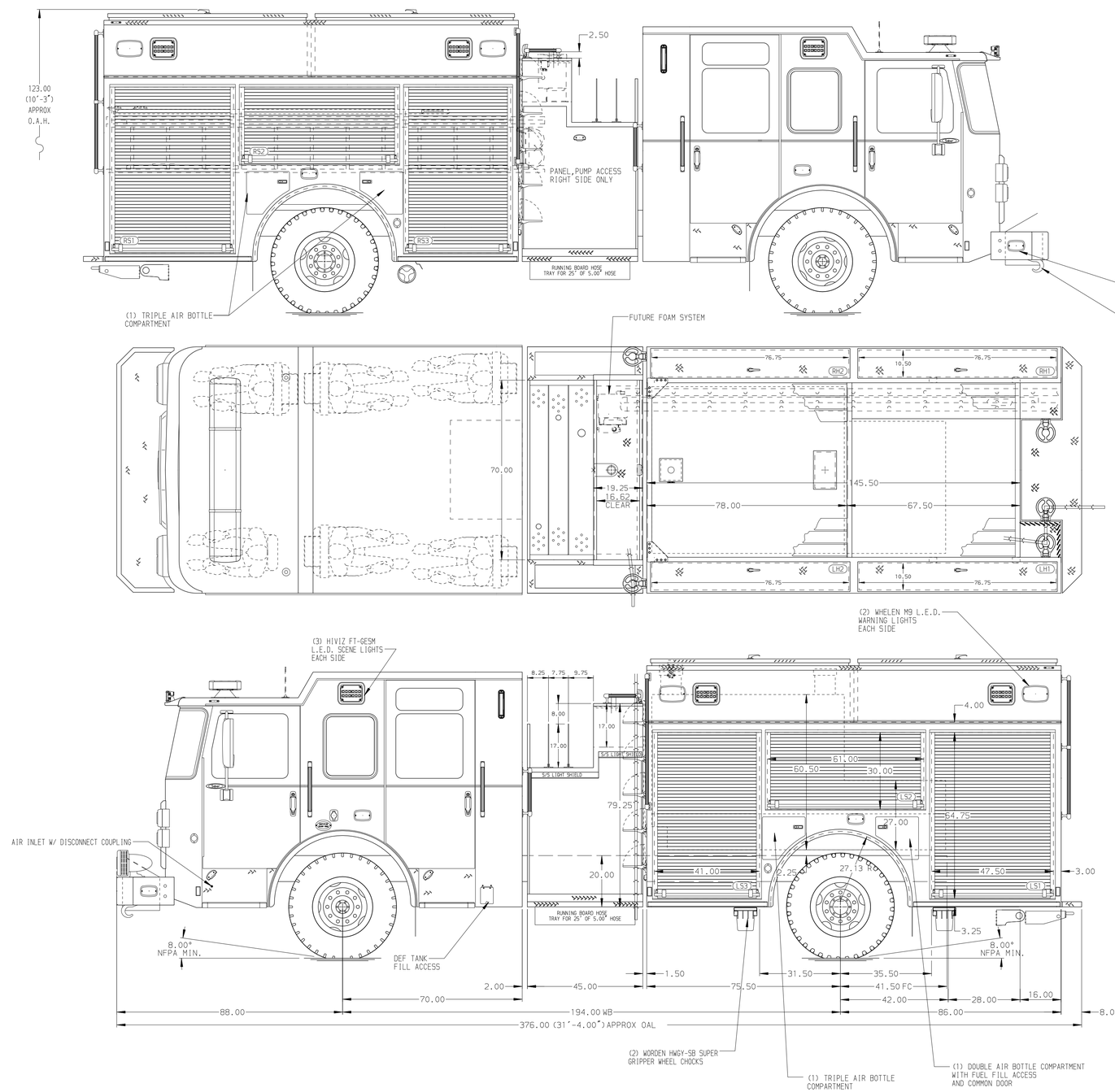

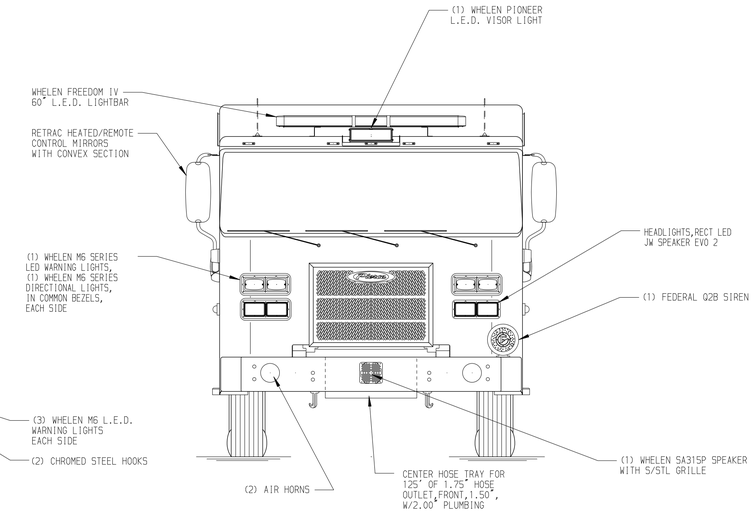

HOSEBED CAPACITY

BED 1
300' OF 2.50" D.J. POLY HOSE

BED 2
1000' OF 5.00" D.J. POLY HOSE

BED 3
300' OF 2.50" D.J. POLY HOSE

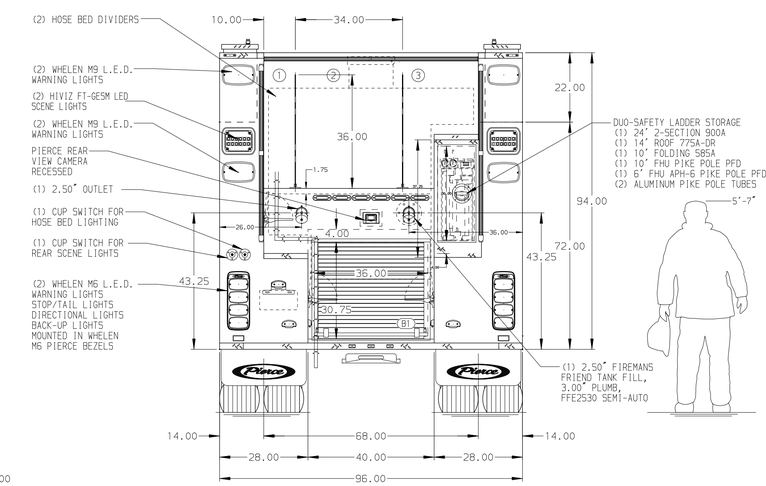

NOTE

DIMENSIONS SHOWN ARE APPROXIMATE AND ARE SUBJECT TO MINOR DEVIATIONS AS MAY OCCUR OR BE NECESSARY IN CONSTRUCTION.
MINOR DETAILS NOT SHOWN.

1. ONE 1.50 OUTLET WITH 2.00 PIPING AND SWIVEL LOCATED IN CENTER BUMPER TRAY
2. SHORELINE RECEPTACLE WITH KUSSMAUL SUPER AUTO-EJECT LOCATED ON DRIVER SIDE OF THE CAB
3. AIR INLET WITH DISCONNECT COUPLING IN THE DRIVER SIDE STEPWELL
4. BATTERY CHARGER LOCATED BEHIND DRIVER'S SEAT
5. BATTERY CHARGE INDICATOR DISPLAYED THROUGH DRIVER SIDE WINDOW
6. SIX ADJUSTABLE SHELVES IN COMPARTMENTS PER SHOP ORDER
7. FOUR FLOOR MOUNTED SLIDE-OUT TRAYS LOCATED PER SHOP ORDER
8. PROVISIONS FOR FRONT INLET

REV	DATE	BY	CH
V	23JAN25	KLE	-

CHASSIS DATA	TITLE	Pierce Pumper Approval Drawing -	JOB NO. 43525
MAKE PIERCE	FOR	Pierce Field Unit -	SCALE 1:24 / DATE
MODEL Saber FR	DWG NO.	43525AD	DRAWN BY VHO / 22NOV24
			CHECKED BY JAP / 22NOV24
			SHEET SIZE D / SHEET NO. 1 OF 1

PIERCE MANUFACTURING INC.

View File Created 23-JAN-2025 14:52:07