PUMPER

BODY
Long Aluminum 2nd Gen Pumper

CHASSIS
Saber FR Chassis

CHASSIS

AXLE,FRONT,CUSTOM
19,500 lb Oshkosh Tak-4 Axle

AXLE,REAR
27,000 lb Dana Axle

ENGINE
PACCAR MX13,510HP,1850LB-FTW/OBD,EPA,2024

TRANSMISSION
ALlison 6th Gen, 4000 EVS P,W/PROGNOSTICS TRANSMISSION,SHIFTER,6-SPD,PUSH BUTTON

BUMPER
19" Extended Steel Painted

CAB
7010 Saber FR Cab

BODY

WATER TANK
1000 Gallon New York Style Water Tank

COMPT,PUMPER,REAR
23.50" FF RollUp Rear Compt

COMPT,PUMPER,LEFT SIDE
171" RollUp Full Height & Depth,Front & Rear Cleaveland Notch 12"

COMPT,PUMPER,RIGHT SIDE
171" RollUp Full Height & Depth,Front & Rear Cleaveland Notch 12"

FIRE SUPPRESSION

PUMPHOUSE
45" Control Zone Side Mount

PUMP
2000 GPM Waterous CSU

CROSSLAYS,1.50"
(2) 1.50" Standard Capacity

CROSSLAYS,2.50"
Not Required

SPEEDLAYS
Speedlays Not Required

GENERATOR
Generator Not Required

Foam System
PLUMBING FOR FUTURE FOAM

Foam Cell
Foam Cell 20 GALLON

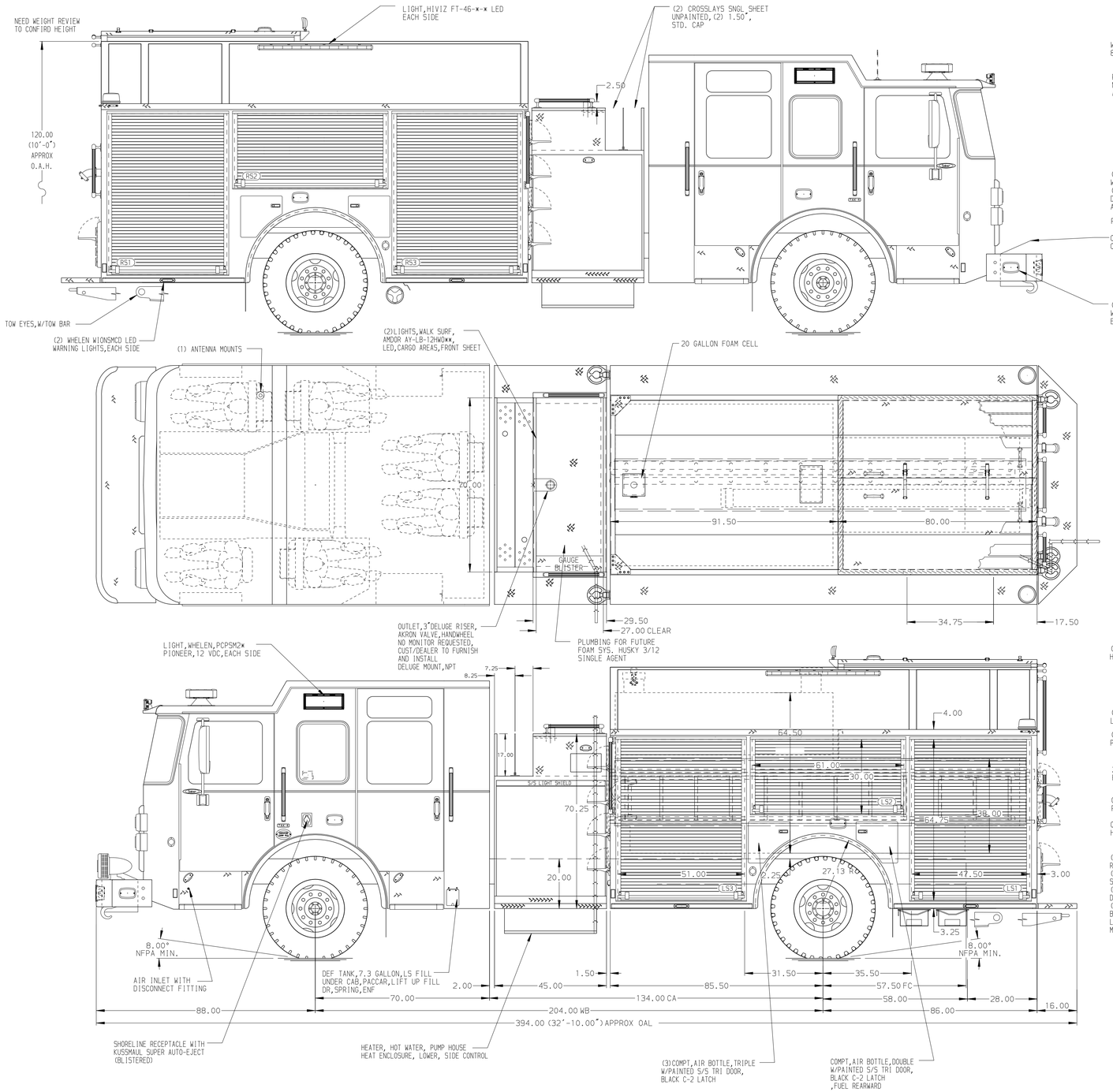

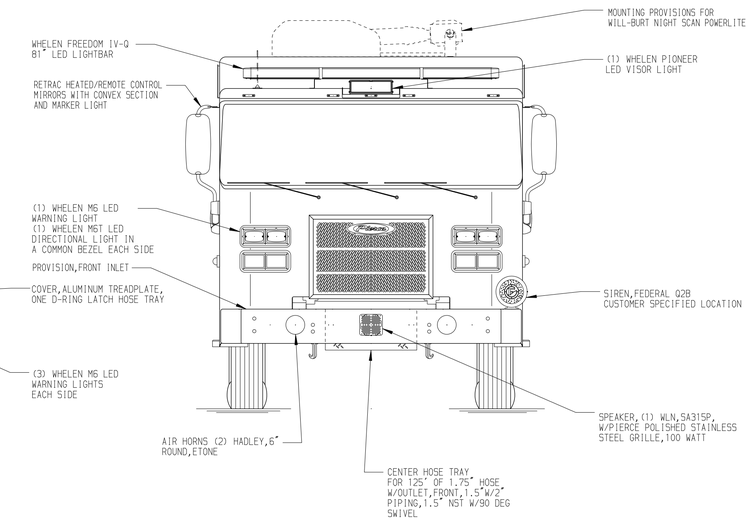

HOSEBED CAPACITY

BED 1

400' OF 3.00" D.J. POLY HOSE

BED 2

1000' OF 5.00" D.J. POLY HOSE

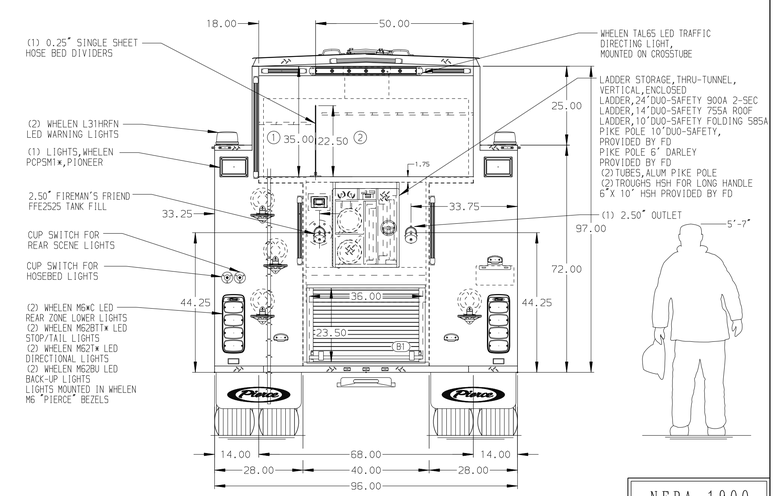

NFPA 1900 (2024) COMPLIANT

Pierce MANUFACTURING INC.

JOB NO.	43560
SCALE	1:24
DATE	
DRAWN BY	RHU
DATE	20JAN25
CHECKED BY	EEM
DATE	21JAN25
SHEET SIZE	D
SHEET NO.	1 OF 1

TITLE: 2000-D-1020P,1000G WATER,20G FOAM,PUMPER BODY,LONG 45"SIDE MOUNT,(2)1.50" CROSSLAY

FOR: COMSTOCK FIRE & RESCUE, COMSTOCK, MICHIGAN

DWG NO.: 43560AD

CHASSIS DATA — MAKE: PIERCE — MODEL: SABER FR

REV	DATE	BY	CH
B	24JUL25	VHO	JAP
A	14MAR25	VHO	JAP

NOTE

DIMENSIONS SHOWN ARE APPROXIMATE AND ARE SUBJECT TO MINOR DEVIATIONS AS MAY OCCUR OR BE NECESSARY IN CONSTRUCTION.
MINOR DETAILS NOT SHOWN.

View File Created 24-JUL-2025 13:29:35