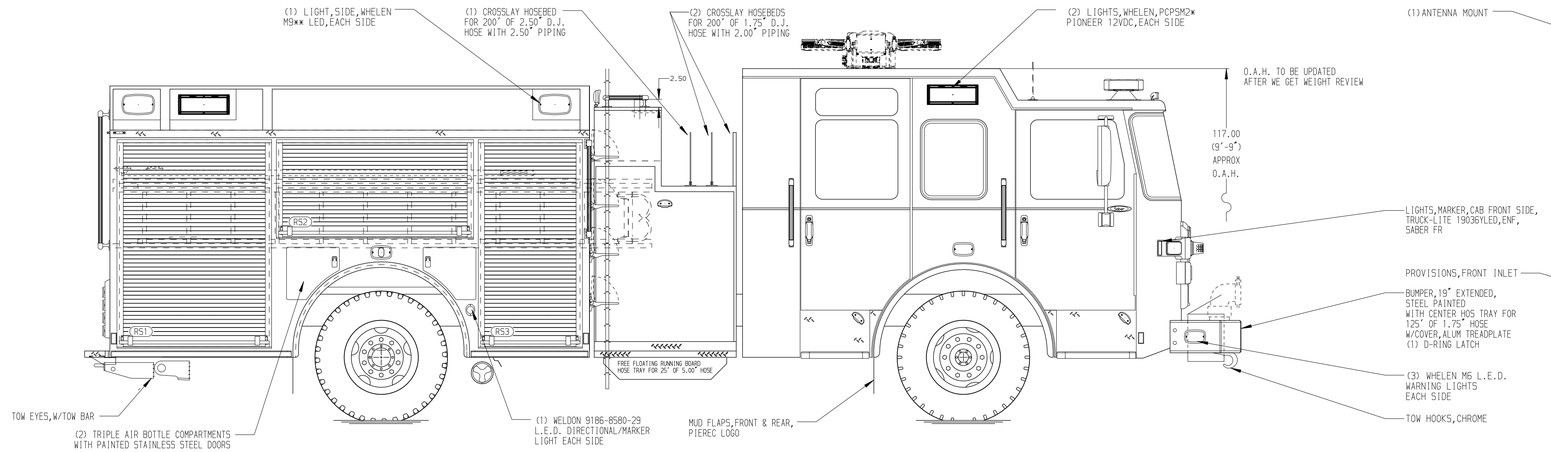


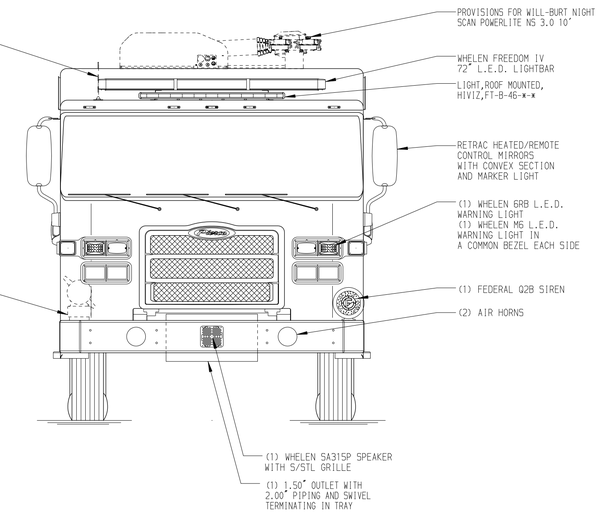


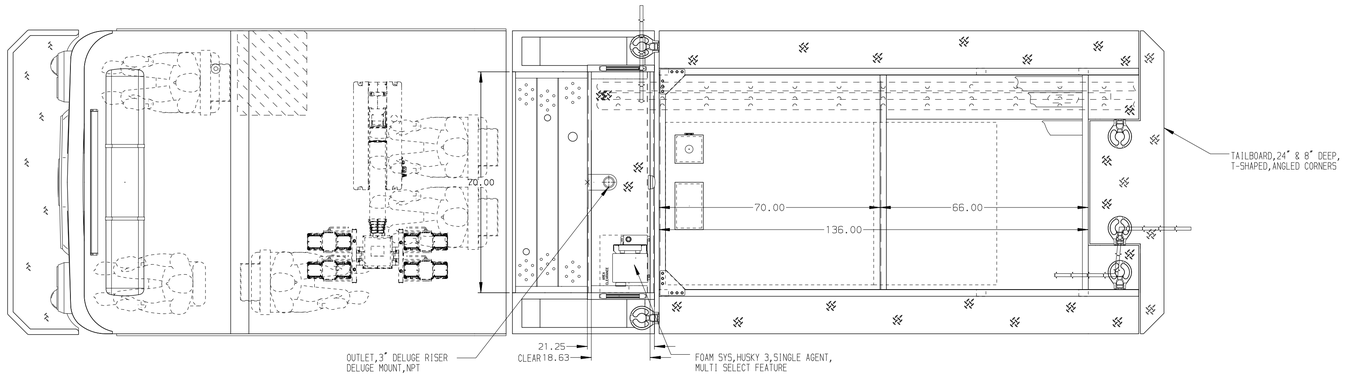


HOSEBED CAPACITIES

1. 1000' OF 5.00" D.J. POLY HOSE
2. 500' OF 2.50" D.J. POLY HOSE

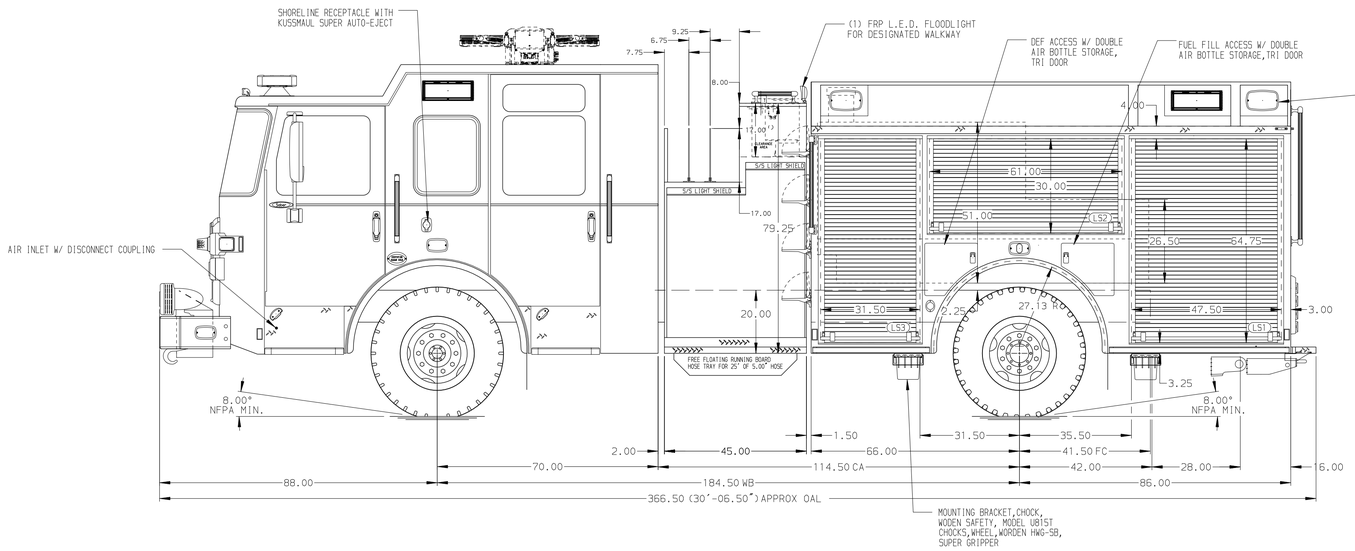


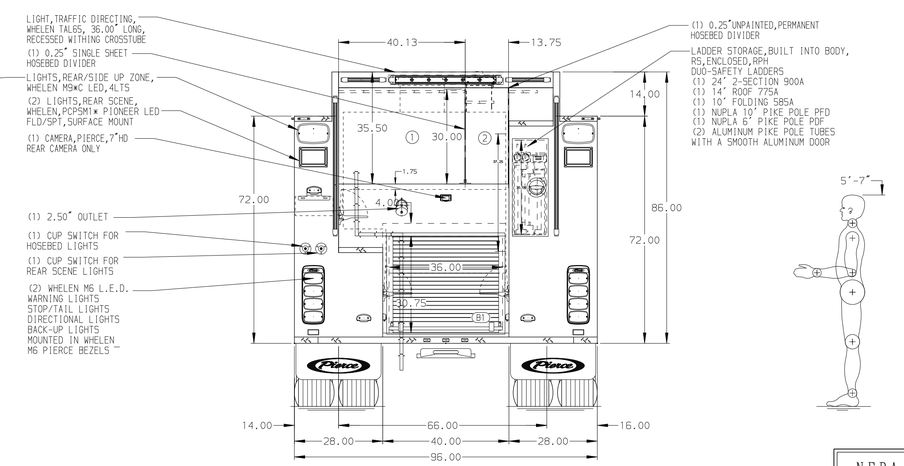


NFPA 1900 (2024) COMPLIANT

**Pierce MANUFACTURING INC.**

| | | | | | | | |
|---|---|---|---|---|---|---|---|
| | | | | CHASSIS DATA | TITLE | 1500GPM,750G TANK,725G WATER,25G FOAM 152" 2G PUMPER,MUX | JOB NO. 43561 |
| | | | | | | | SCALE 1:24 / DATE |
| B | 21APR25 | VHO | DDR | MAKE PIERCE | FOR | BENTON COUNTY FIRE DISTRICT #1 KENNEWICK,WASHINGTON | DRAWN BY RHU / 22JAN25 |
| A | 14MAR25 | VHO | JAP | MODEL | DWG NO. | 43561AD | CHECKED BY EEM / 22JAN25 |
| REV | DATE | BY | CH | SABER FR | | | SHEET SIZE D / SHEET NO. 1 OF 1 |

NOTE

DIMENSIONS SHOWN ARE APPROXIMATE AND ARE SUBJECT TO MINOR DEVIATIONS AS MAY OCCUR OR BE NECESSARY IN CONSTRUCTION.
MINOR DETAILS NOT SHOWN.

View File Created 17-JUL-2025 13:51:39