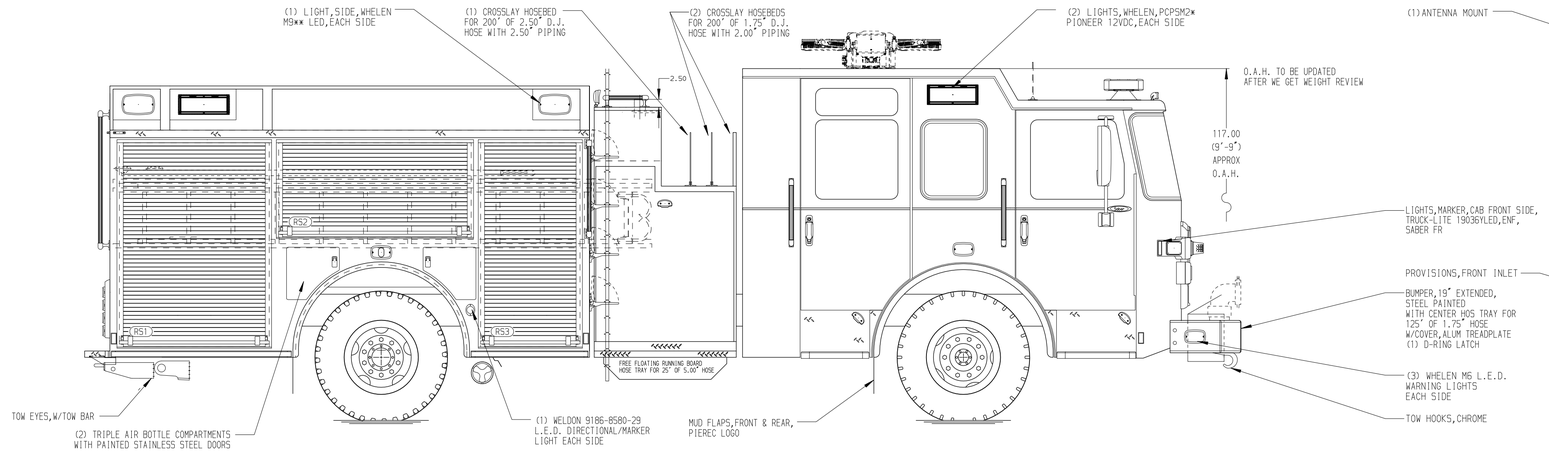

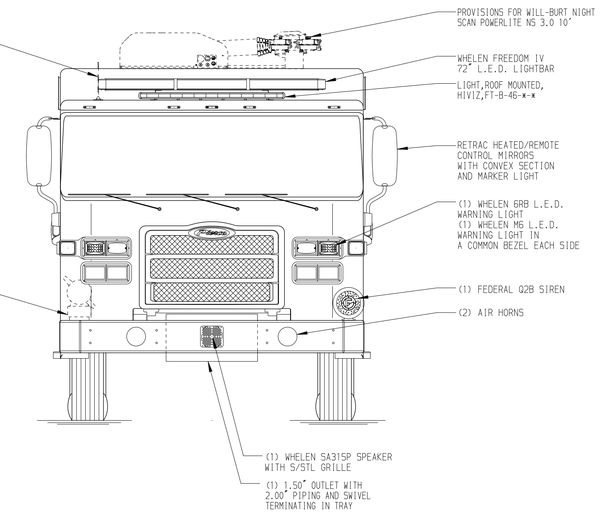

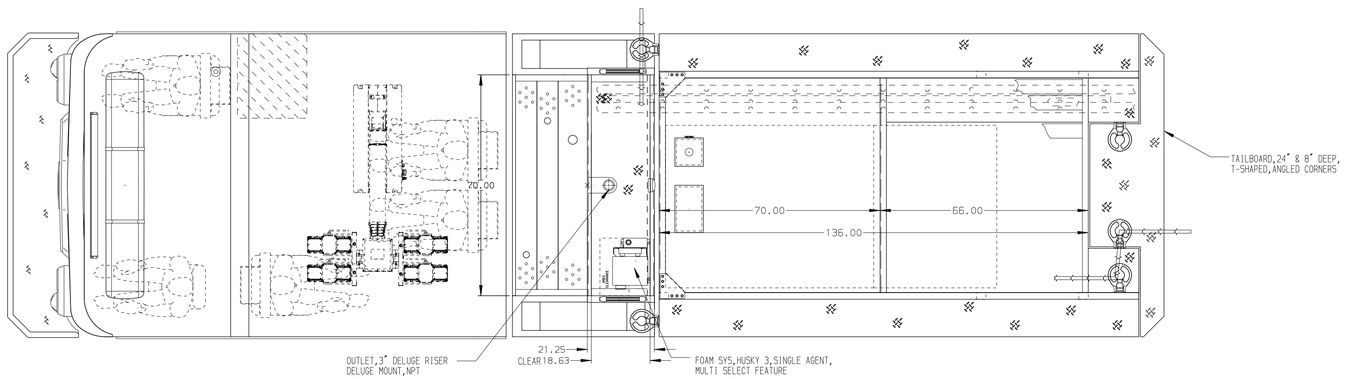

HOSEBED CAPACITIES

1. 1000' OF 5.00" D.J. POLY HOSE
2. 500' OF 2.50" D.J. POLY HOSE

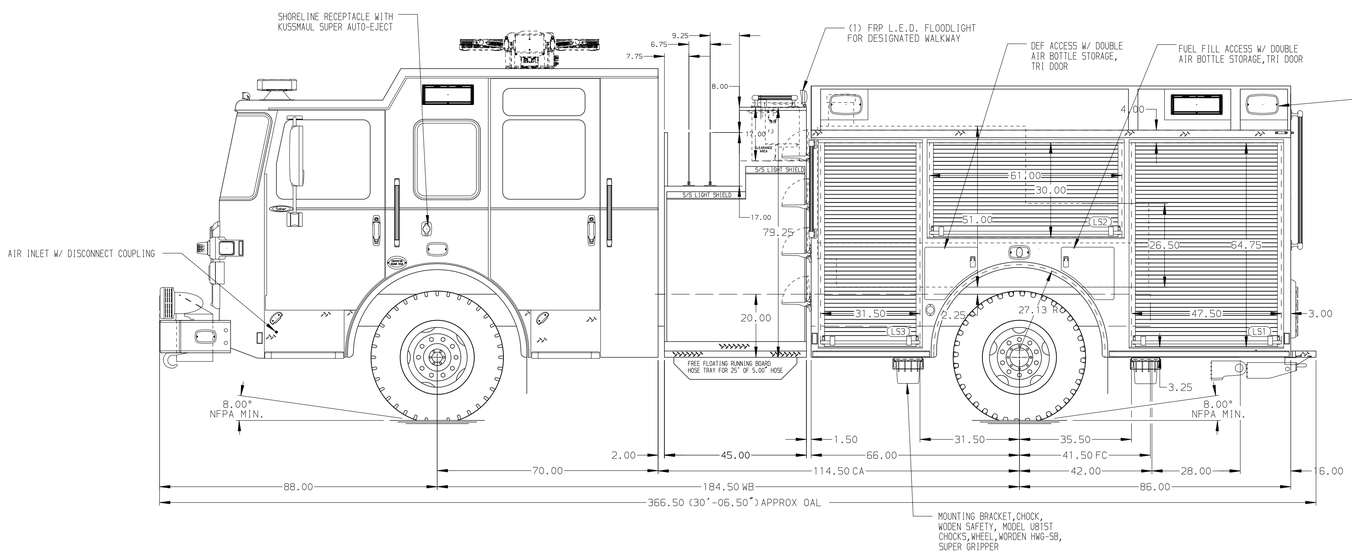

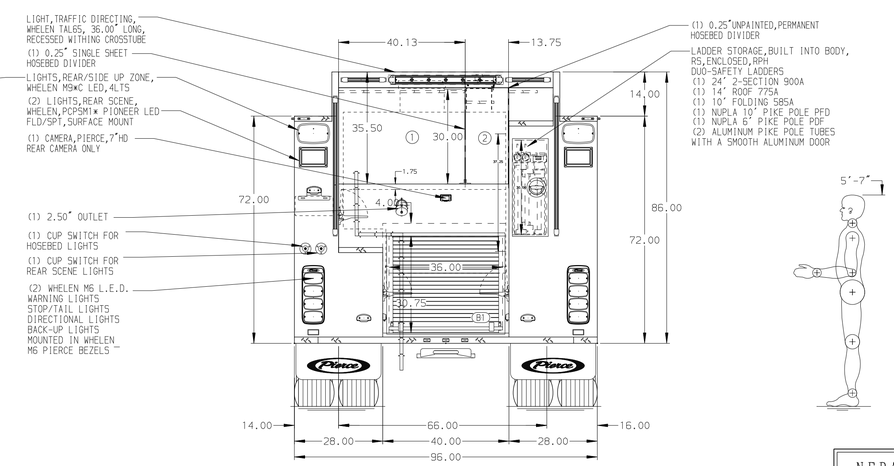

NFPA 1900 (2024) COMPLIANT

Pierce MANUFACTURING INC.

				CHASSIS DATA	TITLE	1500GPM,750G TANK,725G WATER,25G FOAM 152" 2G PUMPER,MUX	JOB NO. 43563
							SCALE 1:24 / DATE
B	21APR25	VHO	AST	MAKE PIERCE	FOR	BENTON COUNTY FIRE DISTRICT #1 KENNEWICK,WASHINGTON	DRAWN BY ADP / 17JAN25
A	24FEB25	ADP	JAP	MODEL			CHECKED BY EEM / 16JAN25
REV	DATE	BY	CH	SABER FR	DWG NO.	43563AD	SHEET SIZE D / SHEET NO. 1 OF 1

NOTE

DIMENSIONS SHOWN ARE APPROXIMATE AND ARE SUBJECT TO MINOR DEVIATIONS AS MAY OCCUR OR BE NECESSARY IN CONSTRUCTION.
MINOR DETAILS NOT SHOWN.

View File Created 21-APR-2025 14:50:25