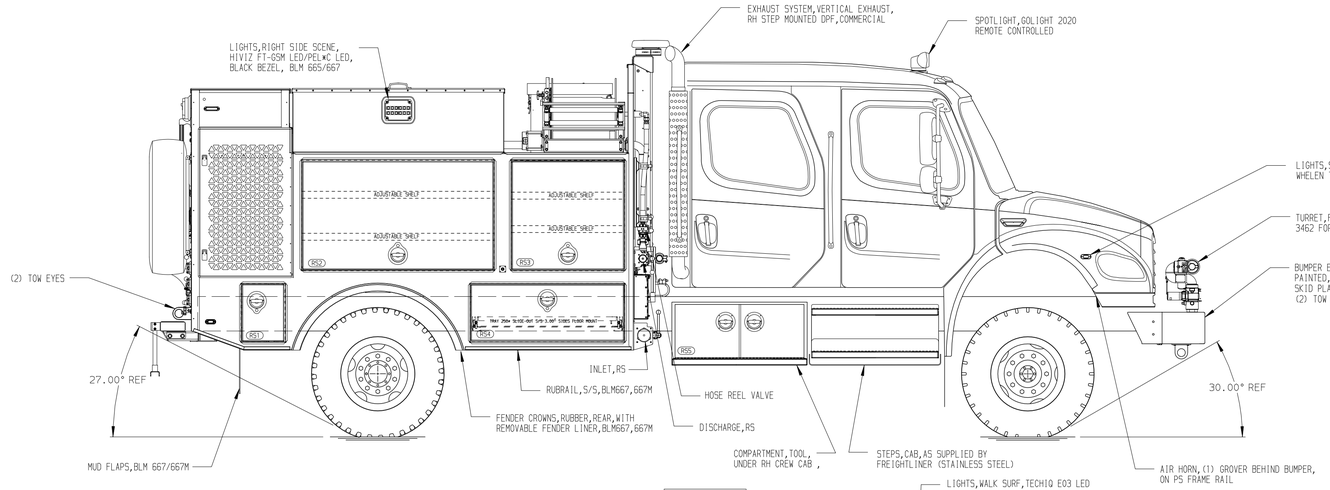

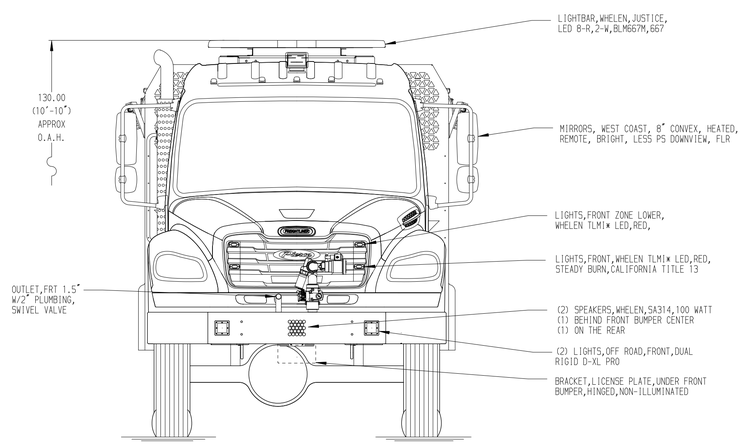

RIGHT SIDE COMPARTMENTS CONTAIN THE FOLLOWING:

COMPARTMENT RS1 CONTAINS:
- (1) FUEL COMPT,TRAY,S/S W/1" LIP

COMPARTMENT RS2 CONTAINS:
- (2)SHELVES,ADJUSTABLE,500 LB CAPACITY, S/S,UNPAINTED,W/SECONDARY RETENTION

COMPARTMENT RS3 CONTAINS:
- (2)SHELVES,ADJUSTABLE,500 LB CAPACITY, S/S,UNPAINTED,W/SECONDARY RETENTION
- (1) FUEL COMPARTMENT TRAY,S/S WITH 1.0" LIP,BLM 667,667M

COMPARTMENT RS4 CONTAINS:
- (1) TRAY,250LB SLIDE-OUT,S/S,3" SIDES, FLOOR MOUNTED,DUAL LOCKS,BLM

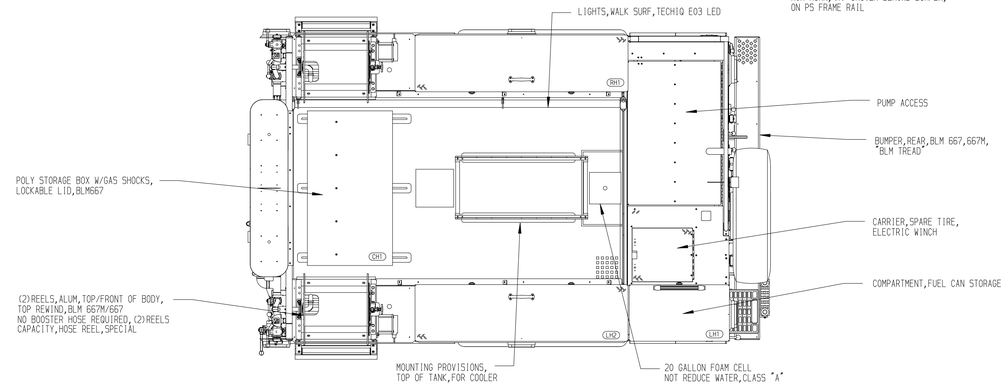

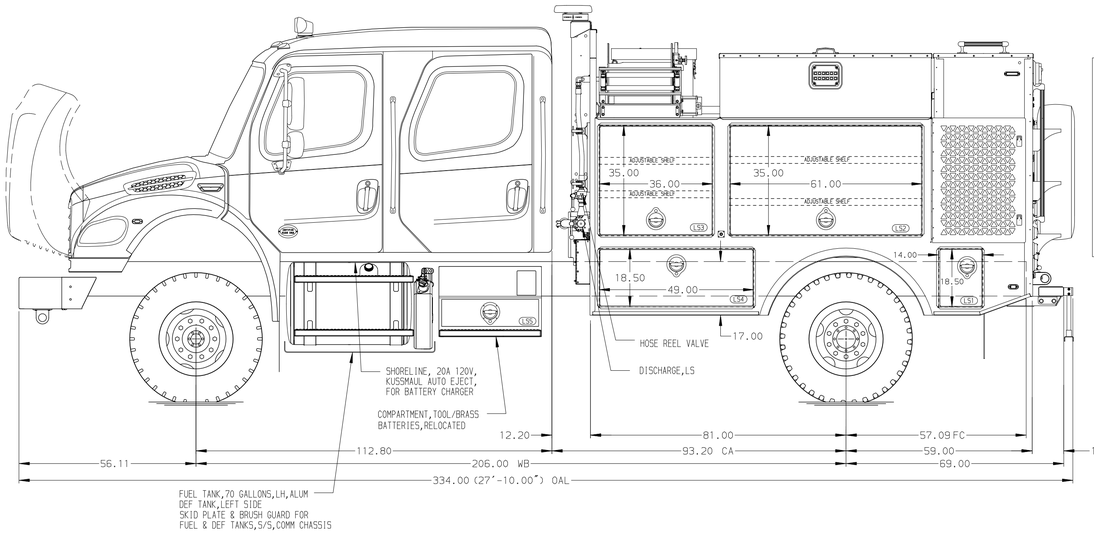

LEFT SIDE COMPARTMENTS CONTAIN THE FOLLOWING:

COMPARTMENT LS1 CONTAINS:
- (2)WHEEL CHOCKS
- (2)SPARE TIRE CARRIER WINCH REMOTE

COMPARTMENT LS2 CONTAINS:
- (2)SHELF,ADJUSTABLE,500 LB CAPACITY, S/S,UNPAINTED,W/SECONDARY RETENTION

COMPARTMENT LS3 CONTAINS:
- (2)SHELVES,ADJUSTABLE,500 LB CAPACITY, S/S,UNPAINTED,W/SECONDARY RETENTION

COMPARTMENT LS4 CONTAINS:

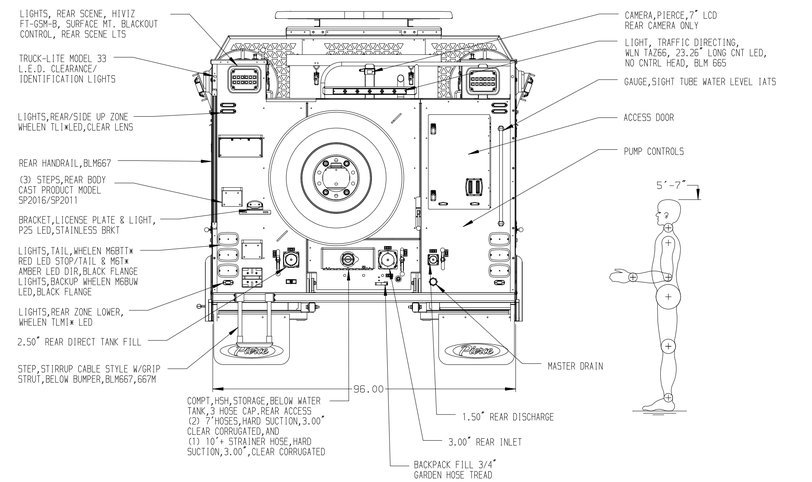

STAINLESS STEEL BODY

NOTE

DIMENSIONS SHOWN ARE APPROXIMATE AND ARE SUBJECT TO MINOR DEVIATIONS AS MAY OCCUR OR BE NECESSARY IN CONSTRUCTION.
MINOR DETAILS NOT SHOWN.

800 GALLON WATER TANK 3598594

NOTE: WINTERIZE BEFORE SHIPMENT,BLM667/667M

REV	DATE	BY	CH
7	08OCT25	TYB	CCS
6	30JUL25	RHU	CCS
5	25JUL25	VHO	AJA

CHASSIS DATA
MAKE: FL
MODEL: M2-106 4X4 PLUS

Pierce MANUFACTURING INC.

TITLE: DARLEY,1.5AGE W/KBT 48HP,820G TANK,800G WATER,20G FOAM 140" BODY BLM 667R, MUX

FOR: BLM LAS CRUCES DISTRICT OFFICE LAS CRUCES, NEW MEXICO

DWG NO.: 43595AD

JOB NO.	43595
SCALE	1:24
DATE	
DRAWN BY	VHO
DATE	16JUN25
CHECKED BY	AJA
DATE	16JUN25
SHEET SIZE	D
SHEET NO.	1 OF 1

View File Created 08-OCT-2025 10:25:21