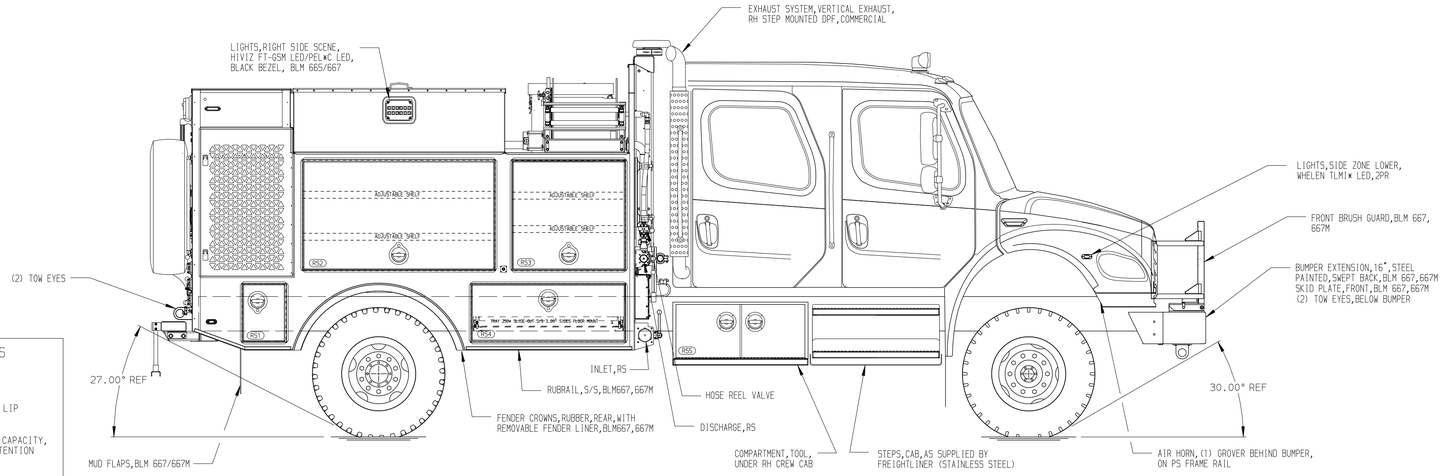

RIGHT SIDE COMPARTMENTS CONTAIN THE FOLLOWING:

COMPARTMENT RS1 CONTAINS:
- (1) FUEL COMPT,TRAY,S/S W/1" LIP

COMPARTMENT RS2 CONTAINS:
- (2)SHELVES,ADJUSTABLE,500 LB CAPACITY, S/S,UNPAINTED,W/SECONDARY RETENTION

COMPARTMENT RS3 CONTAINS:
- (2)SHELVES,ADJUSTABLE,500 LB CAPACITY, S/S,UNPAINTED,W/SECONDARY RETENTION
- (1) FUEL COMPARTMENT TRAY,S/S WITH 1.0" LIP,BLM 667,667M

COMPARTMENT RS4 CONTAINS:
- (1) TRAY,250LB SLIDE-OUT,S/S,3" SIDES, FLOOR MOUNTED,DUAL LOCKS,BLM

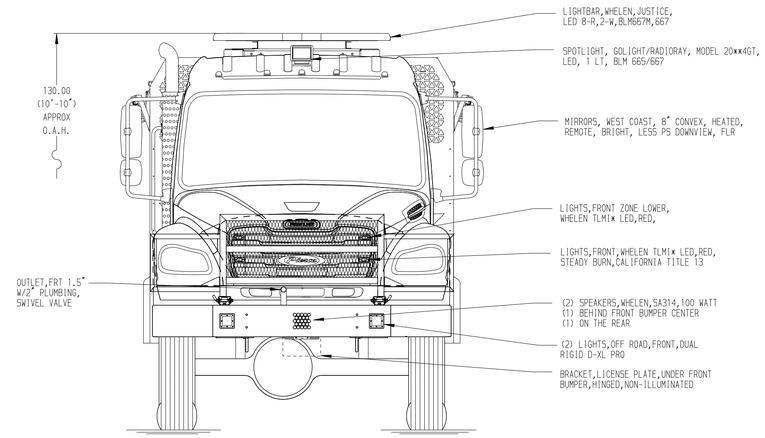

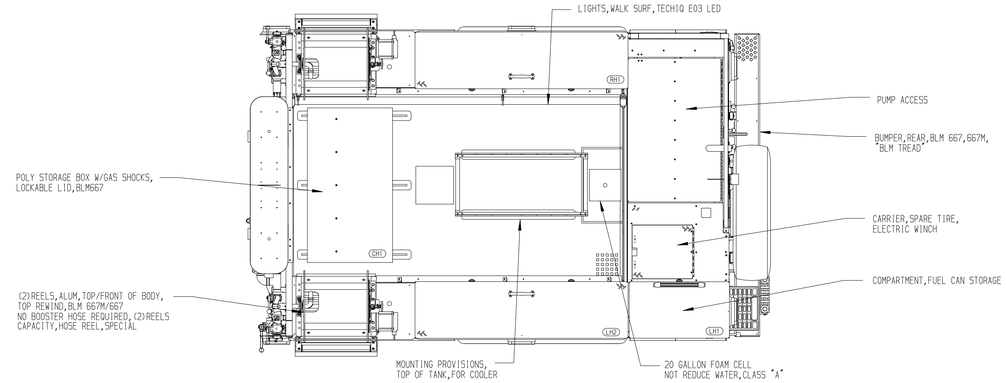

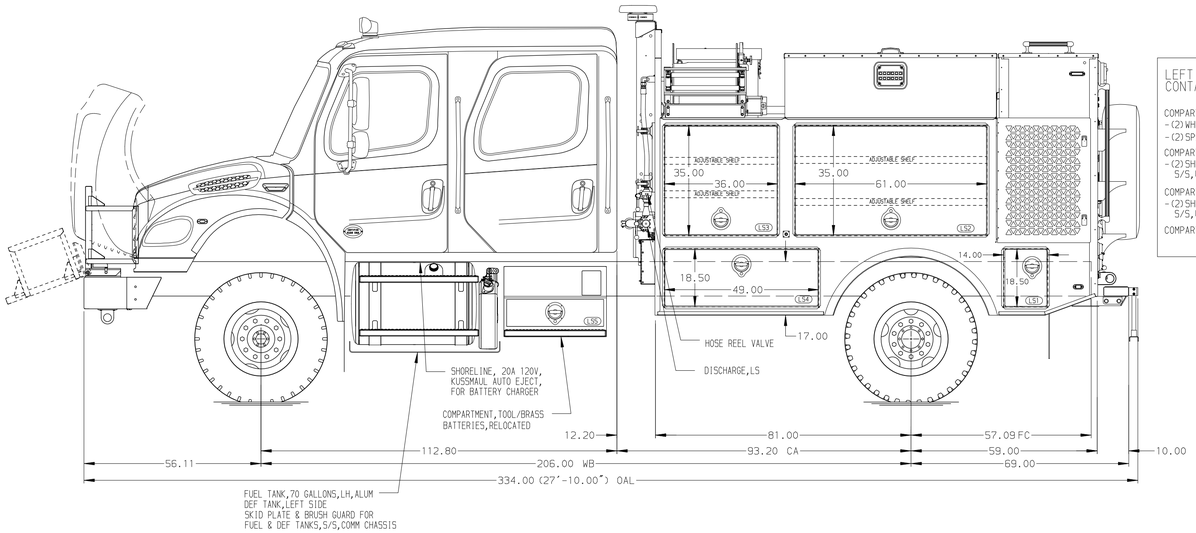

LEFT SIDE COMPARTMENTS CONTAIN THE FOLLOWING:

COMPARTMENT LS1 CONTAINS:
- (2)WHEEL CHOCKS
- (2)SPARE TIRE CARRIER WINCH REMOTE

COMPARTMENT LS2 CONTAINS:
- (2)SHELF,ADJUSTABLE,500 LB CAPACITY, S/S,UNPAINTED,W/SECONDARY RETENTION

COMPARTMENT LS3 CONTAINS:
- (2)SHELVES,ADJUSTABLE,500 LB CAPACITY, S/S,UNPAINTED,W/SECONDARY RETENTION

COMPARTMENT LS4 CONTAINS:

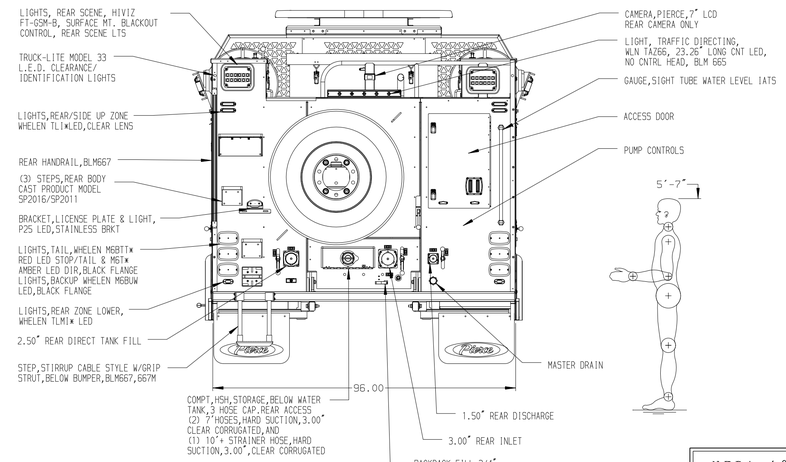

NFPA 1900 (2024) COMPLIANT

STAINLESS STEEL BODY

NOTE

DIMENSIONS SHOWN ARE APPROXIMATE AND ARE SUBJECT TO MINOR DEVIATIONS AS MAY OCCUR OR BE NECESSARY IN CONSTRUCTION.
MINOR DETAILS NOT SHOWN.

800 GALLON WATER TANK 3598594

NOTE: WINTERIZE BEFORE SHIPMENT,BLM667/667M

REV	DATE	BY	CH
▽	-	-	-

CHASSIS DATA
MAKE: FL
MODEL: M2-106 4X4 PLUS

Pierce MANUFACTURING INC.

TITLE: DARLEY,1.5AGE W/KBT 48HP,820G TANK,800G WATER,20G FOAM 140" BODY BLM 667R, MUX
FOR: BLM PECOS DISTRICT ROSWELL,NM
DWG NO.: 43596AD

JOB NO.	43596
SCALE	1:24
DATE	
DRAWN BY	ADP 02JUL25
CHECKED BY	AJA 2JUL25
SHEET SIZE	D
SHEET NO.	1 OF 1

View File Created 02-JUL-2025 12:44:36