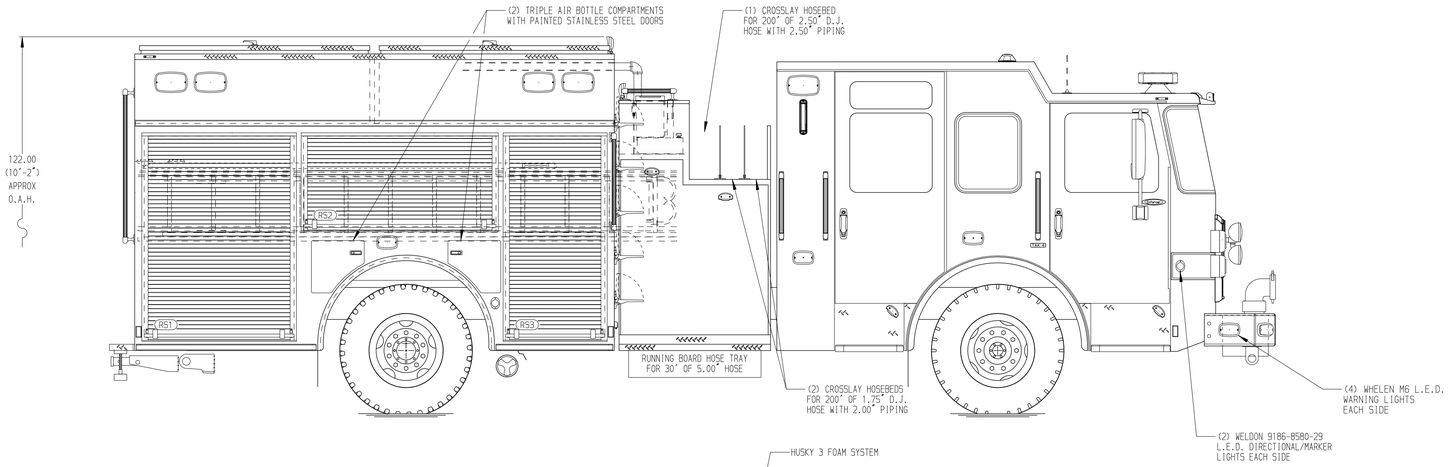

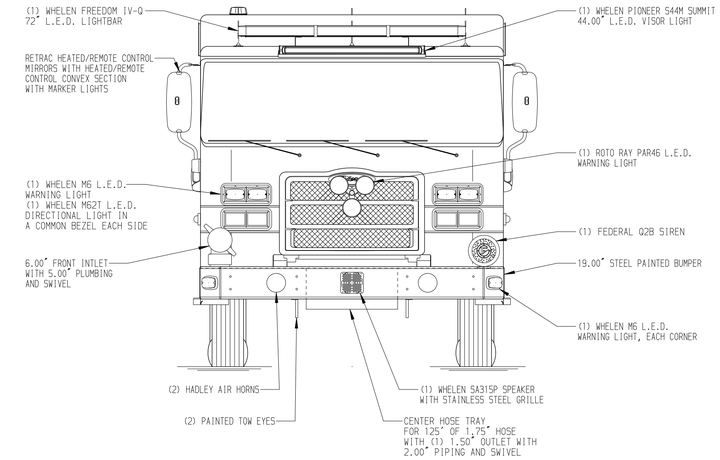

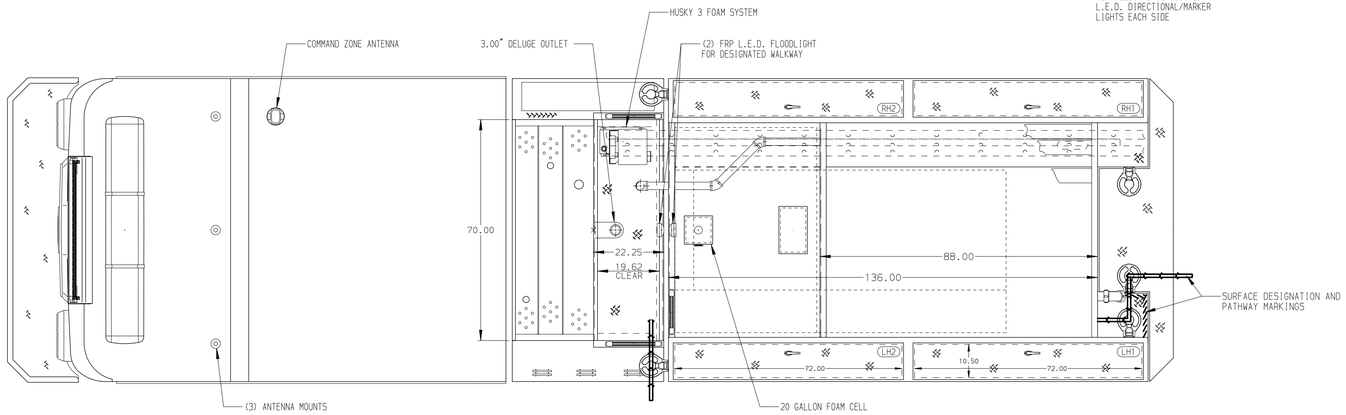

HOSEBED CAPACITIES

1. 500' OF 5.00" D.J. POLY HOSE
2. 500' OF 5.00" D.J. POLY HOSE
3. 300' OF 3.00" D.J. POLY HOSE
4. 500' OF 3.00" D.J. POLY HOSE

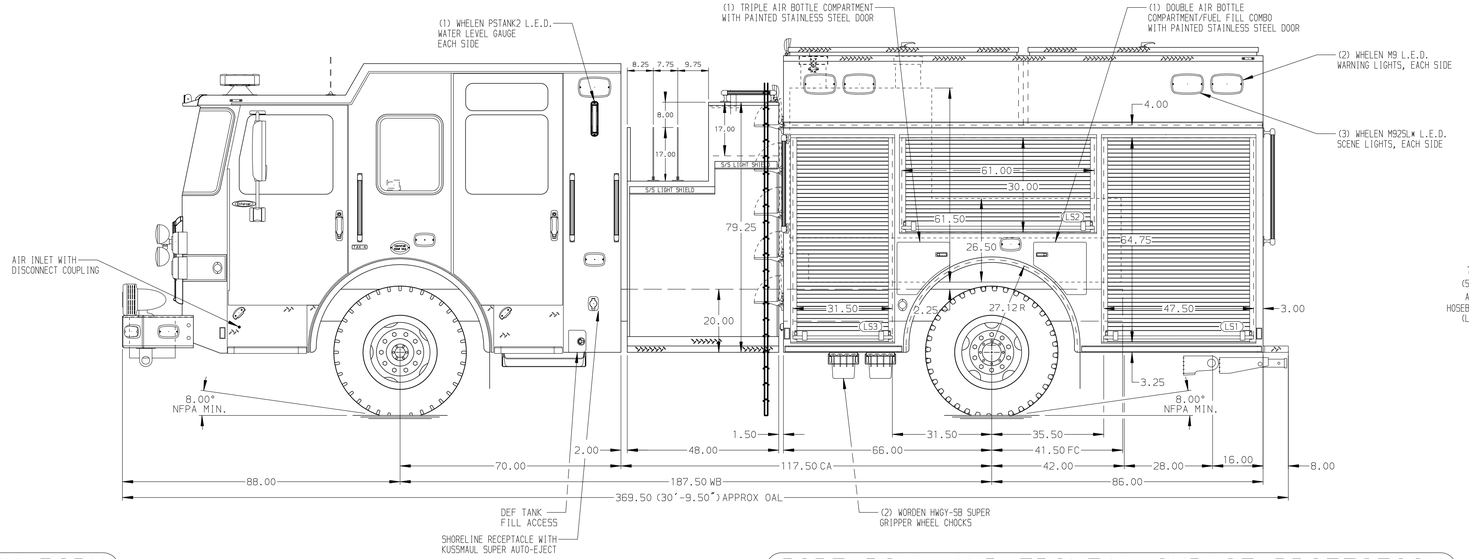

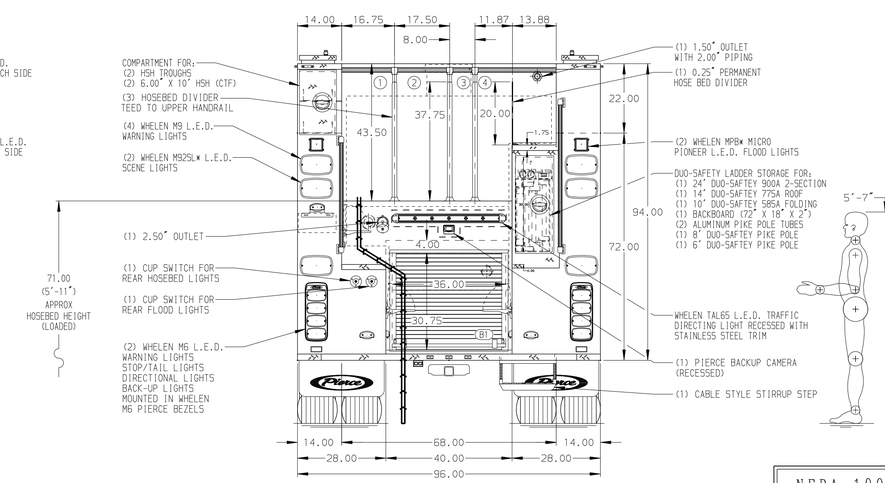

NFPA 1900 (2024) COMPLIANT

ALUMINUM BODY

SIDE ROLL AND FRONTAL IMPACT PROTECTION

NOTE

DIMENSIONS SHOWN ARE APPROXIMATE AND ARE SUBJECT TO MINOR DEVIATIONS AS MAY OCCUR OR BE NECESSARY IN CONSTRUCTION.
MINOR DETAILS NOT SHOWN.

1. DUAL L.E.D. LIGHT STRIPS LOCATED IN HOSE BED
2. PACCAR DEF TANK MOUNTED UNDER CAB ON THE DRIVER'S SIDE
3. BATTERY CHARGER LOCATED PER ORDER
4. BATTERY CHARGE INDICATOR LOCATED BEHIND DRIVER'S SIDE WINDOW

REV	DATE	BY	CH
3	23MAY25	JER	AST
2	03APR25	MMF	AST
1	07MAR25	JDA	KLH

CUSTOMER APPROVAL

APPROVED BY: _____

DATE: _____

Pierce MANUFACTURING INC.

CHASSIS DATA	
MAKE	PIERCE
MODEL	ENFORCER
TITLE	1500GPM, 770G TANK, 750G WATER, 20G FOAM 152" PUMPER, MUX
FOR	ANDOVER FIRE DEPARTMENT ANDOVER, KANSAS
DWG NO.	43650AD

JOB NO.	43650
SCALE	1:24
DATE	
DRAWN BY	JDA 27FEB25
CHECKED BY	KLH 27FEB25
SHEET SIZE	D
SHEET NO.	1 OF 1

View File Created 23-MAY-2025 11:11:45