PUMPER

BODY
Medium Aluminum 2nd Gen Pumper

CHASSIS
Enforcer Chassis

CHASSIS

AXLE, FRONT, CUSTOM
18,000 lb Henderson Steertek Axle

AXLE, REAR
24,000 lb Meritor Axle

ENGINE
500 HP Cummins X12 Engine

TRANSMISSION
Allison 6th Gen, 4000 EVS PR

BUMPER
13" Extended Stainless Steel

CAB
6000 Enforcer Cab

BODY

TOTAL TANK CAPACITY
530 Gallon Poly Tank

WATER CAPACITY
500 Gallons of Water

FOAM CELL
30 Gallon Foam Cell

COMPT, PUMPER, REAR
30.75" FF Double Door Rear Compt

COMPT, PUMPER, LEFT SIDE
152" Lap Full Height Front & Rear

COMPT, PUMPER, RIGHT SIDE
152" Lap Full Height Front & Rear FDLER

FIRE SUPPRESSION

PUMPHOUSE
52" Control Zone Side Mount

PUMP
1500 GPM Hale QMAX-150

CROSSLAYS, 1.50"
Crosslays Not Required

CROSSLAYS, 2.50"
(2) 1.75" of 300' Capacity (Side Outlets)

SPEEDLAYS
Speedlays Not Required

GENERATOR
Generator Not Required

FOAM SYSTEM
FoamPro 2001 Single Agent Foam System

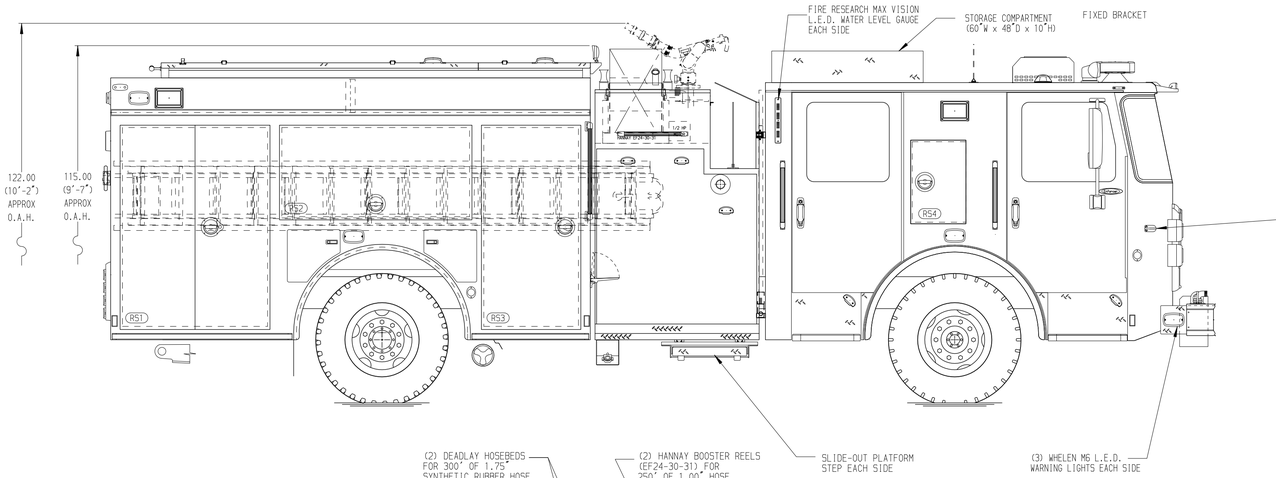

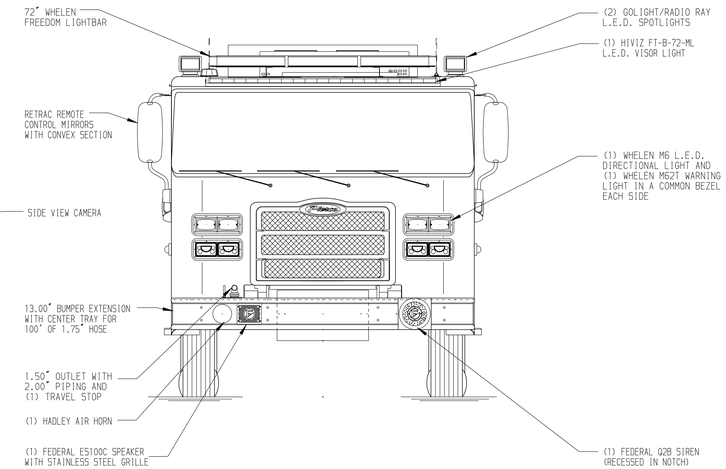

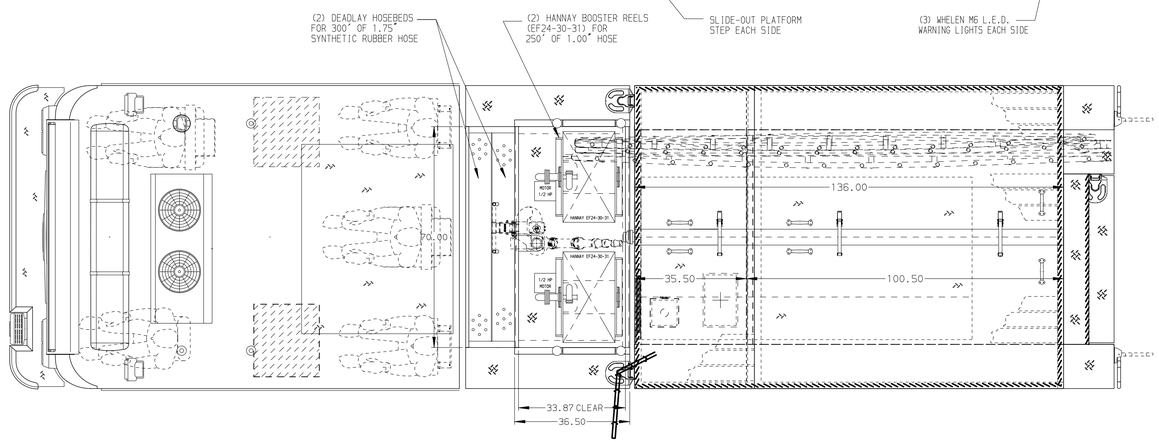

HOSEBED CAPACITIES

1. 1000' OF 4.00" SYNTHETIC HOSE
2. 800' OF 2.50" SYNTHETIC HOSE
3. 400' OF 1.75" SYNTHETIC HOSE
4. STORAGE FOR (5) FIVE GALLON FOAM CONTAINERS

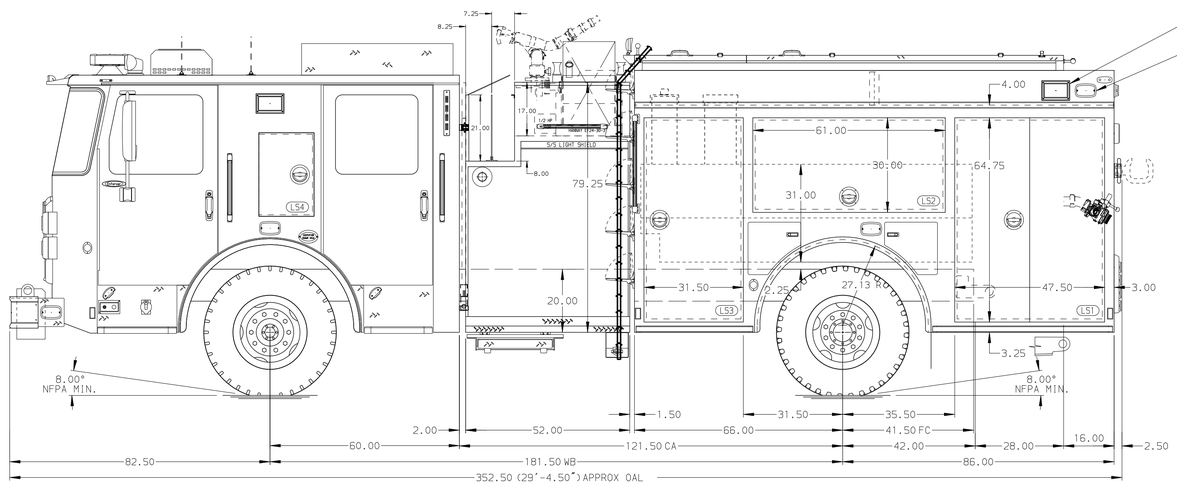

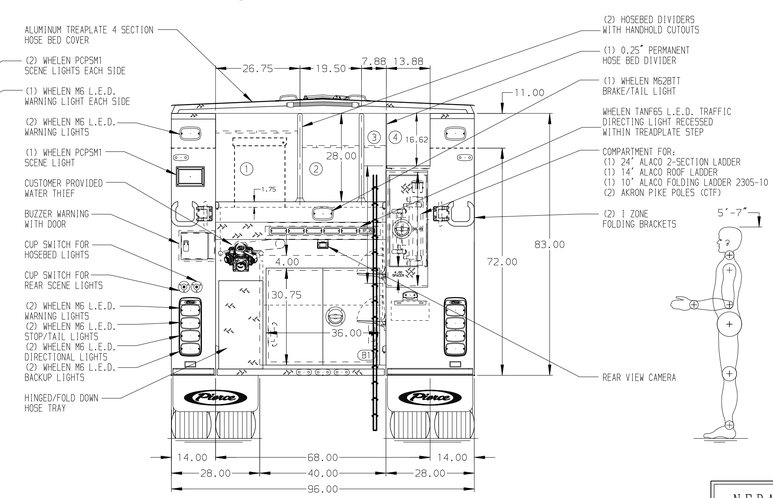

MAXIMUM O.A.H. 115.00"

SIMILAR TO 43331

NFPA 1900 (2024) COMPLIANT

NOTE

DIMENSIONS SHOWN ARE APPROXIMATE AND ARE SUBJECT TO MINOR DEVIATIONS AS MAY OCCUR OR BE NECESSARY IN CONSTRUCTION.
MINOR DETAILS NOT SHOWN.

1. ONE 1.50 OUTLET WITH 2.00 PIPING AND SWIVEL LOCATED ON RS TOP OF BUMPER
2. SHORELINE RECEPTACLE NEMA STRAIGHT BLADE LOCATED IN THE DRIVER SIDE STEPWELL
3. AIR OUTLET WITH SHUT OFF VALVE LOCATED IN THE DRIVER SIDE STEPWELL
4. BATTERY CHARGER LOCATED PER ORDER
5. BATTERY CHARGE INDICATOR LOCATED ON DRIVER SEAT RISER
6. WORDEN WHEEL CHOCKS TO BE SHIPPED LOOSE

REV	DATE	BY	CH
3	09OCT25	JAM	BSE
2	22SEP25	JAM	BSE
1	02SEP25	JAM	BSE

CHASSIS DATA: MAKE PIERCE; MODEL ENFORCER

Pierce MANUFACTURING INC.

TITLE: PIERCE PUMPER APPROVAL DRAWING – –

FOR: LOS ANGELES COUNTY – –

DWG NO. 43692AD-SH1

JOB NO.	43692 01-02
SCALE	1:24
DATE	21JUL25
DRAWN BY	JAM
CHECKED BY	BSE
SHEET SIZE	D
SHEET NO.	1 OF 2

View File Created 14-OCT-2025 12:23:29