PUMPER

BODY
Medium Aluminum 2nd Gen Pumper

CHASSIS
Saber FR Chassis

CHASSIS

AXLE, FRONT, CUSTOM
18,000 Lb Tak-4 Axle

AXLE, REAR
27,000 Lb Dana Axle

ENGINE
450 HP Cummins L9 Engine

TRANSMISSION
Allison 6th Gen, 3000 EVS P

BUMPER
19" Extended Painted Steel

CAB
7000 Saber FR Cab

BODY

TOTAL TANK CAPACITY
775 Gallon New York Style Poly Tank

WATER CAPACITY
750 Gallons of Water

FOAM CELL
25 Gallon Foam Cell

COMPT, PUMPER, REAR
30.75" FF RollUp Rear Compt

COMPT, PUMPER, LEFT SIDE
152" RollUp Full Height Front & Rear FDLER

COMPT, PUMPER, RIGHT SIDE
152" RollUp Low FDLER

FIRE SUPPRESSION

PUMPHOUSE
45" Control Zone Side Mount

PUMP
1500 GPM Waterous CSU

CROSSLAYS, 1.50"
(2) 1.50" Standard Capacity

CROSSLAYS, 2.50"
Crosslay Not Required

SPEEDLAYS
Speedlays Not Required

GENERATOR
Generator Not Required

FOAM SYSTEM
Husky System 3 Foam System

SAFETY
Side Roll and Frontal Impact Protection

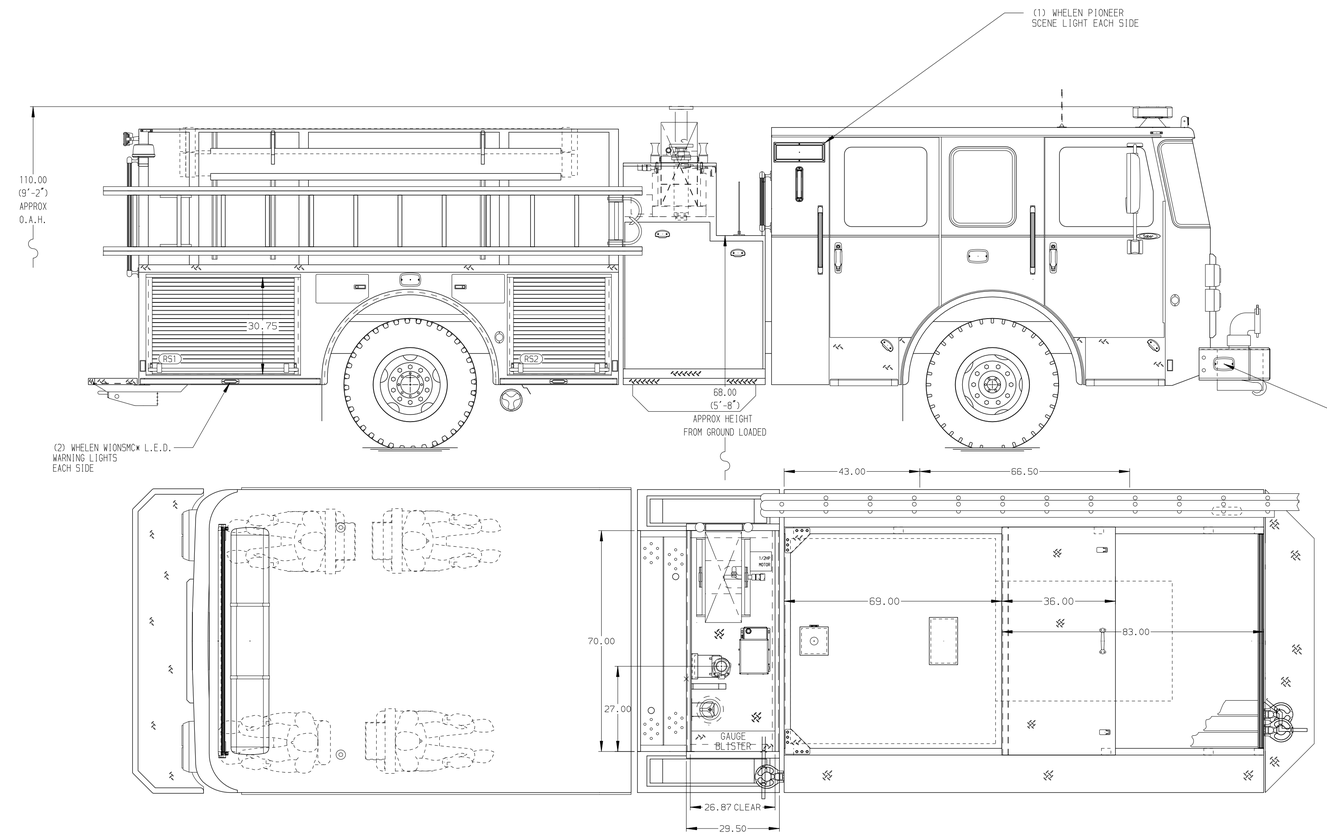

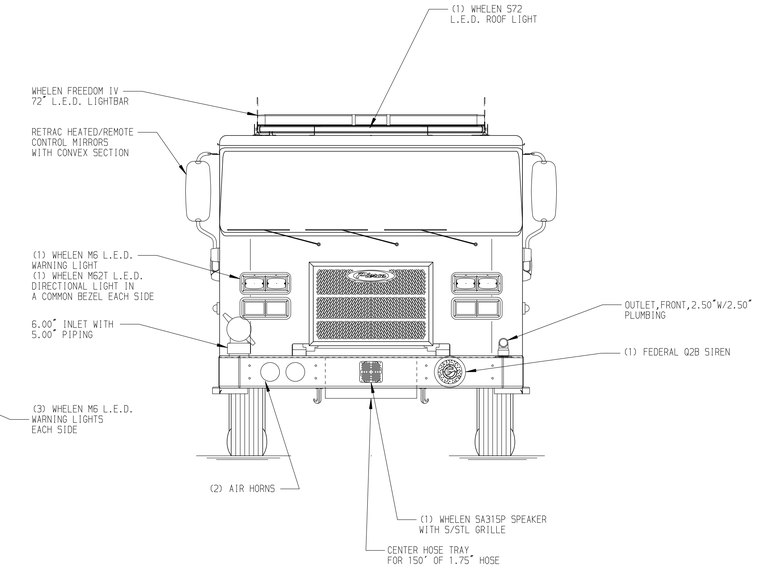

HOSEBED CAPACITY

BED 1
400' OF 3.00" D.J. POLY HOSE

BED 2
1200' OF 5.00" D.J. POLY HOSE

BED 3
350' OF 1.88" D.J. POLY HOSE

BED 4
250' OF 2.50" D.J. POLY HOSE

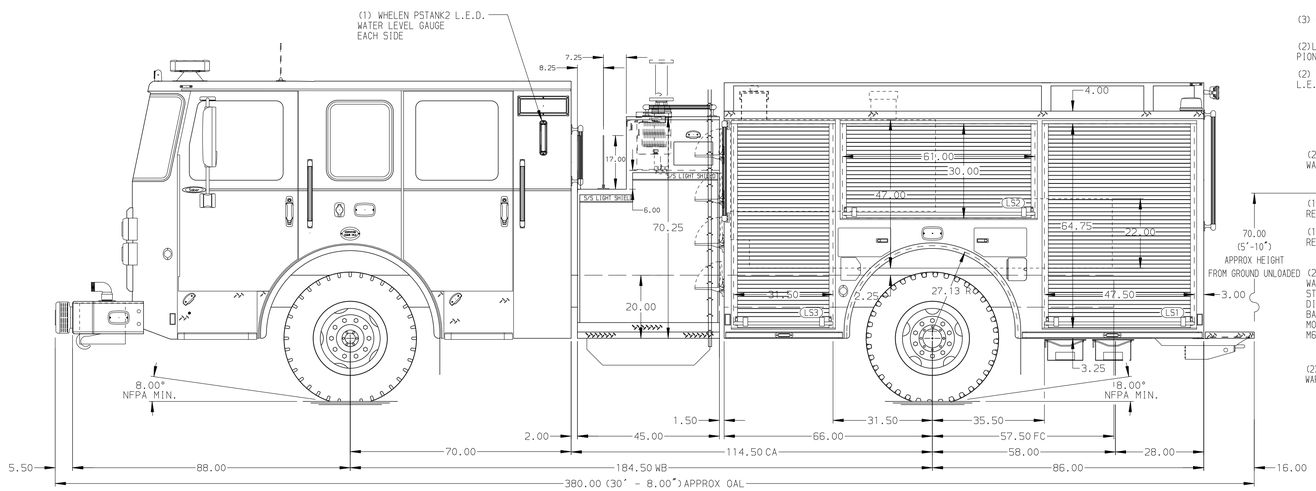

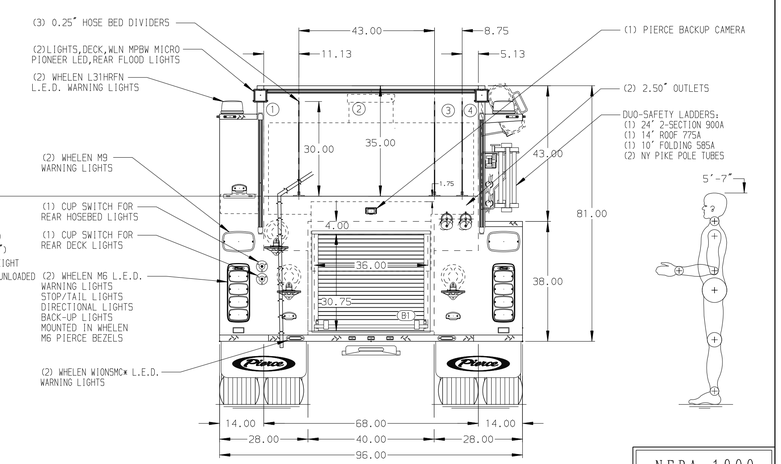

NFPA 1900 (2024) COMPLIANT

NOTE
DIMENSIONS SHOWN ARE APPROXIMATE AND ARE SUBJECT TO MINOR DEVIATIONS AS MAY OCCUR OR BE NECESSARY IN CONSTRUCTION.
MINOR DETAILS NOT SHOWN.

REV	DATE	BY	CH
V	03SEP25	ADP	CGA

CHASSIS DATA
MAKE: PIERCE
MODEL: SABER FR

Pierce MANUFACTURING INC.

TITLE	Pierce Pumper Approval Drawing –	JOB NO.	44003
		SCALE 1:24	DATE
FOR	County of Prince George, Virginia –	DRAWN BY MMF	20MAY25
		CHECKED BY AMI	21MAY25
DWG NO.	44003AD	SHEET SIZE D	SHEET NO. 1 OF 1

View File Created 04-SEP-2025 07:14:28