PUMPER

BODY
Long Aluminum 2nd Gen Pumper

CHASSIS
Saber FR Chassis

CHASSIS

AXLE,FRONT,CUSTOM
19,500 lb Oshkosh Tak-4 Axle

AXLE,REAR
27,000 lb Dana Axle

ENGINE
PACCAR MX13,510HP,1850LB-FTW/OBD,EPA,2024

TRANSMISSION
ALlison 6th Gen, 4000 EVS P,W/PROGNOSTICS TRANSMISSION,SHIFTER,6-SPD,PUSH BUTTON

BUMPER
19" Extended Steel Painted

CAB
7010 Saber FR Cab

BODY

WATER TANK
1000 Gallon New York Style Water Tank

COMPT,PUMPER,REAR
23.50" FF RollUp Rear Compt

COMPT,PUMPER,LEFT SIDE
171" RollUp Full Height & Depth,Front & Rear Cleaveland Notch 12"

COMPT,PUMPER,RIGHT SIDE
171" RollUp Full Height & Depth,Front & Rear Cleaveland Notch 12"

FIRE SUPPRESSION

PUMPHOUSE
45" Control Zone Side Mount

PUMP
2000 GPM Waterous CSU

CROSSLAYS,1.50"
(2) 1.50" Standard Capacity

CROSSLAYS,2.50"
Not Required

SPEEDLAYS
Speedlays Not Required

GENERATOR
Generator Not Required

Foam System
PLUMBING FOR FUTURE FOAM

Foam Cell
Foam Cell 20 GALLON

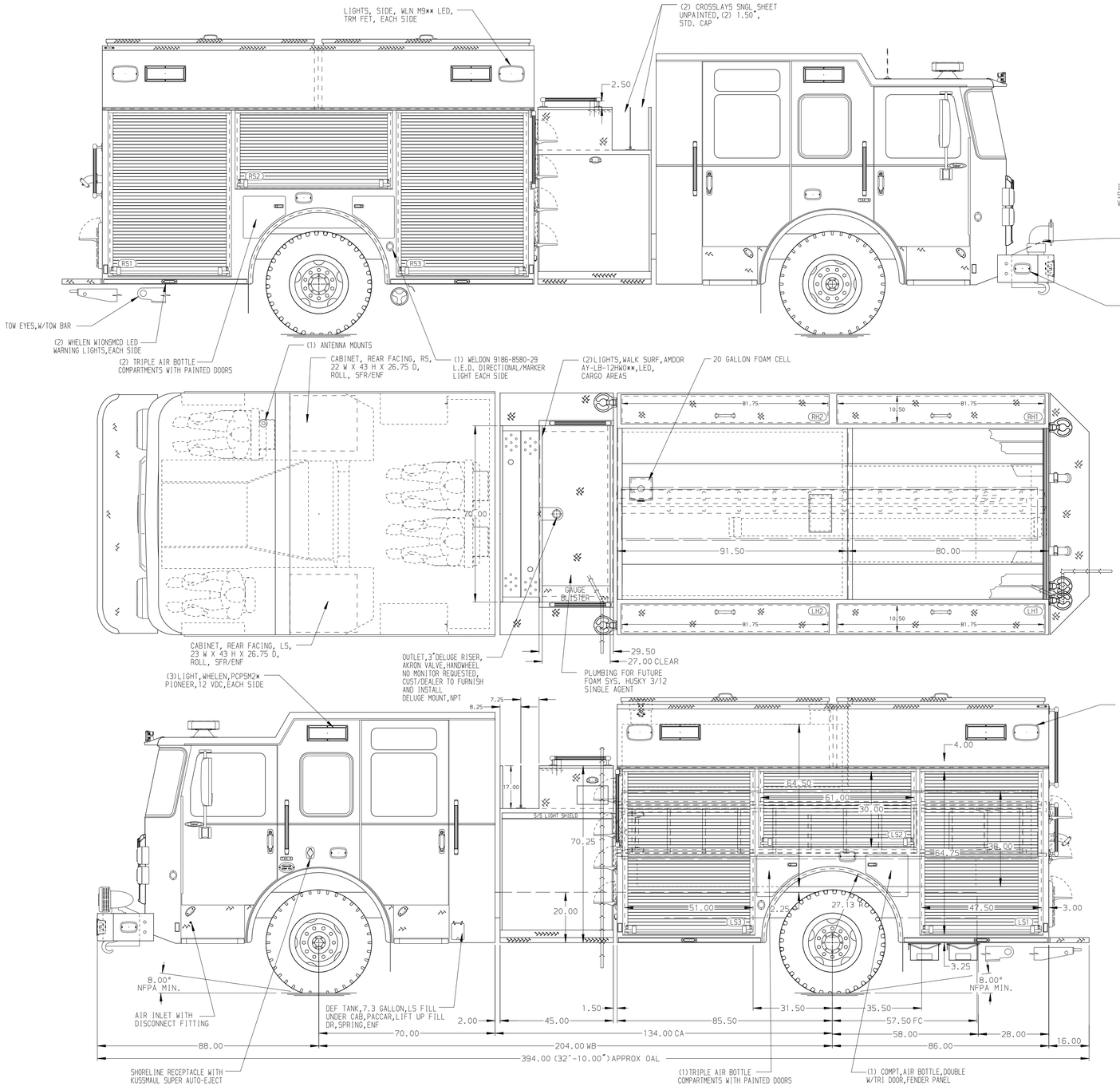

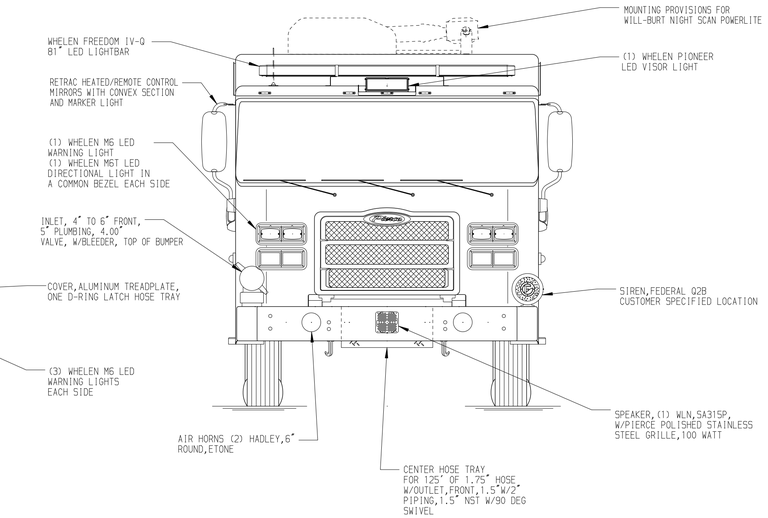

HOSEBED CAPACITY

BED 1
200' OF 1.75" D.J. POLY HOSE

BED 2
400' OF 2.50" D.J. POLY HOSE

BED 3
1000' OF 5.00" D.J. POLY HOSE

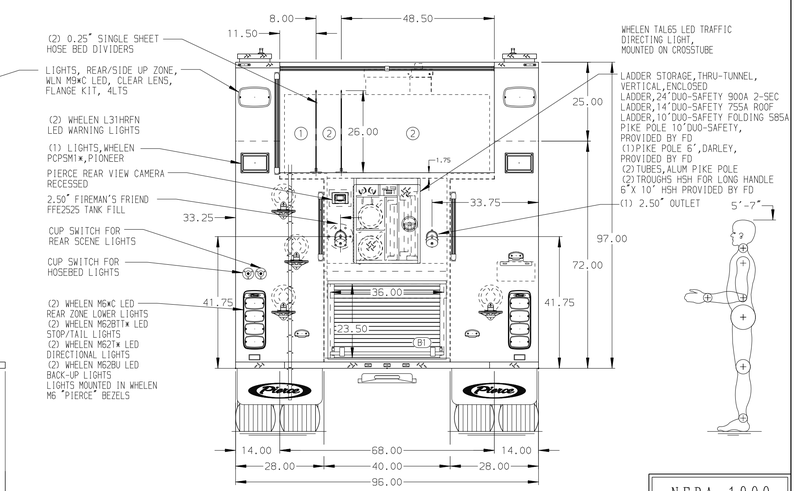

NFPA 1900 (2024) COMPLIANT

Pierce MANUFACTURING INC.

JOB NO.	44089
SCALE	1:24
DATE	
DRAWN BY	VHO
DATE	20MAR25
CHECKED BY	EEM
DATE	21MAR25
SHEET SIZE	D
SHEET NO.	1 OF 1

TITLE: 2000GPM, 1020G TANK, 1000G WATER, 20G FOAM 171" BODY PUMPER 2G, HARDWIRED

FOR: WINCHESTER FIRE DEPARTMENT WINCHESTER, KENTUCKY

DWG NO.: 44089AD

CHASSIS DATA — MAKE: PIERCE — MODEL: SABER FR

REV	DATE	BY	CH
7	29OCT25	VHO	CGA
6	31JUL25	RHU	JAP
5	30MAY25	RHU	JAP

NOTE

DIMENSIONS SHOWN ARE APPROXIMATE AND ARE SUBJECT TO MINOR DEVIATIONS AS MAY OCCUR OR BE NECESSARY IN CONSTRUCTION.
MINOR DETAILS NOT SHOWN.

View File Created 30-OCT-2025 13:58:54