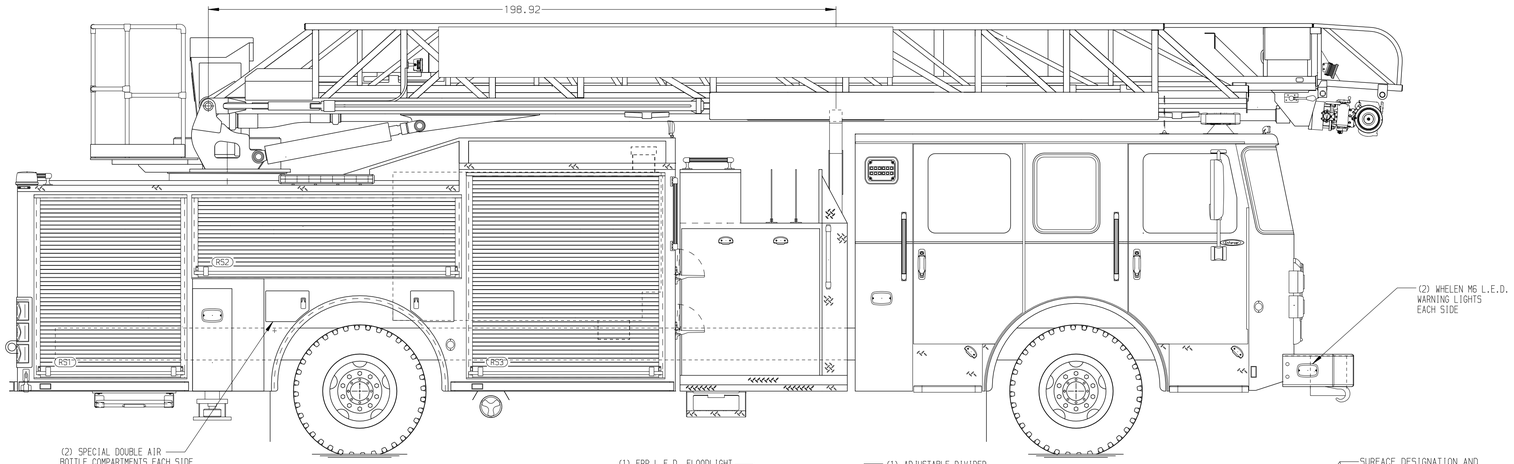

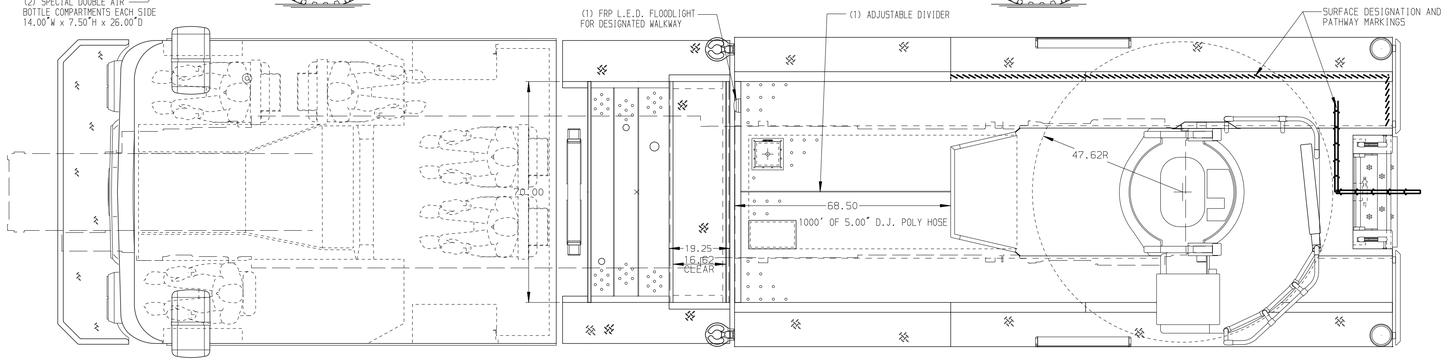

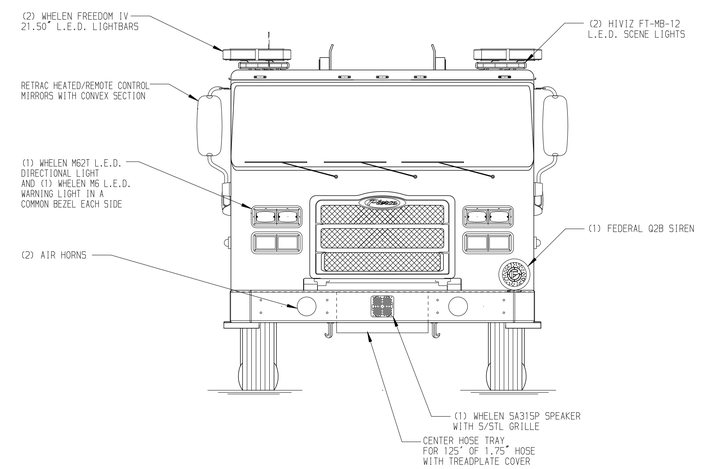

BODY	WATER TANK
75' HAL Aluminum Body	500 Gallon Poly Water Tank
COMPT,LEFT SIDE FRONT	Foam System
Full Height Rollup Forward	Plumbing for Future Husky Foam System
COMPT,LEFT SIDE REAR	Foam Cell
Full Height Rollup Rearward	20 Gallon Foam Cell, Non-Reduced Water
COMPT,RIGHT SIDE FRONT	
Full Height Rollup Forward	
COMPT,RIGHT SIDE REAR	
Full Height Rollup Rearward	

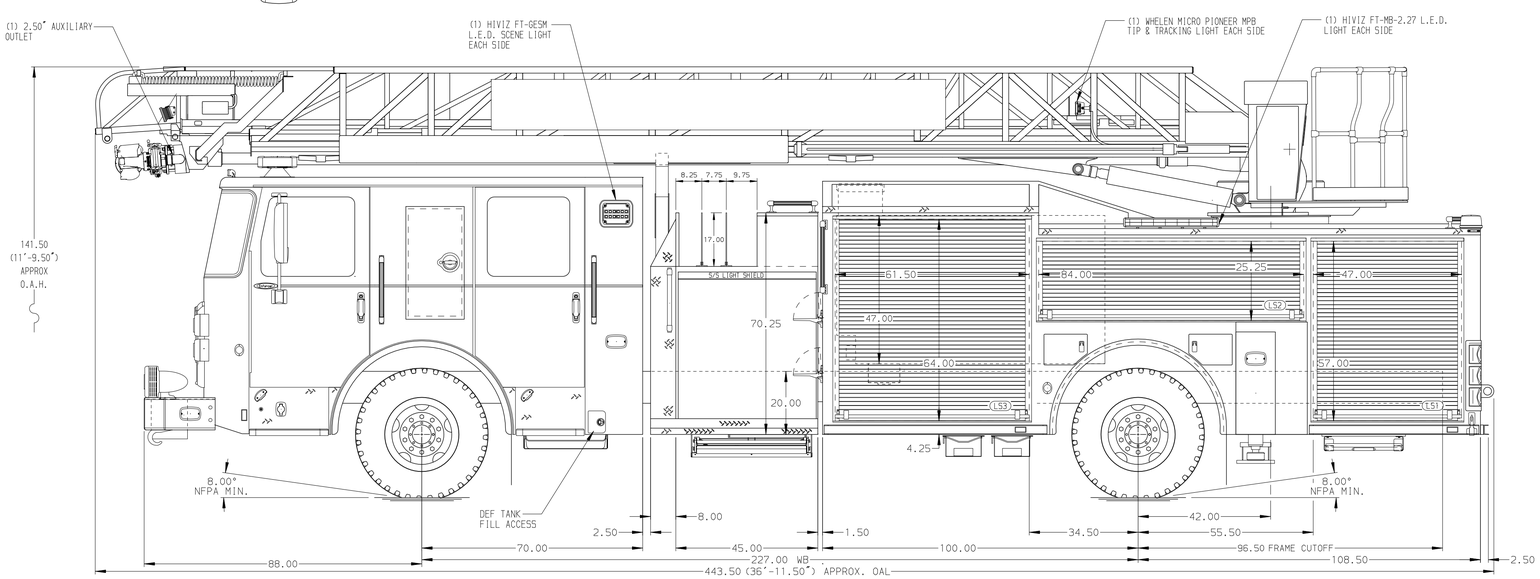

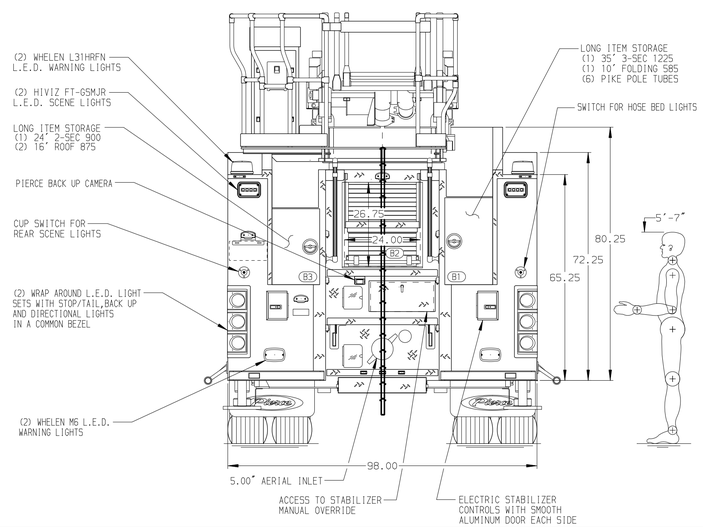

CHASSIS	CAB	AXLE,FRONT,CUSTOM	TRANSMISSION	PUMPHOUSE	CROSSLAYS,1.50"	SPEEDLAYS
Enforcer FR Chassis	7000 Enforcer Cab	20,000 Lb Meritor Axle	ALLison 6th Gen, 4000 EVS P	45° Control Zone Side Mount	(2) 1.50" Standard Capacity	Speedlays Not Required
ENGINE	**BUMPER**	**AXLE,REAR**		**PUMP**	**CROSSLAYS,2.50"**	**GENERATOR**
510 HP Paccar MX13 Engine	19" Extended Painted Steel	33,500 Lb Meritor Axle		2000 GPM Waterous CSU	(1) 2.50" Standard Capacity	Generator Not Required

CUSTOMER APPROVAL

APPROVED BY: _____

DATE: _____

Pierce MANUFACTURING INC.

NOTE

DIMENSIONS SHOWN ARE APPROXIMATE AND ARE SUBJECT TO MINOR DEVIATIONS AS MAY OCCUR OR BE NECESSARY IN CONSTRUCTION.
MINOR DETAILS NOT SHOWN.

1. ONE 1.50 OUTLET WITH 2.00 PIPING AND SWIVEL LOCATED IN CENTER BUMPER TRAY
2. SHORELINE RECEPTACLE WITH KUSSMAUL SUPER AUTO-EJECT LOCATED ON DRIVER SIDE STEPWELL
3. AIR INLET WITH DISCONNECT COUPLING IN THE DRIVER SIDE STEPWELL
4. BATTERY CHARGER LOCATED BEHIND DRIVER SEAT
5. BATTERY CHARGE INDICATOR LOCATED PER ORDER
6. DUAL L.E.D. LIGHT STRIPS LOCATED IN HOSE BED
7. SIX ADJUSTABLE SHELVES IN COMPARTMENTS PER ORDER
8. FOUR FLOOR MOUNTED SLIDE-OUT TRAYS LOCATED IN COMPARTMENTS PER ORDER
9. 7.00" AERIAL LIMITED RETRACTION
10. DUAL LIGHT STRIPS LOCATED IN COMPARTMENTS PER ORDER
11. 1.50" RAISED AERIAL PEDESTAL
12. 1500 GPM HIGH FLOW WATERWAY
13. LIFTING EYE RESCUE ATTACHMENT AT AERIAL TIP
14. TECNIQ 3-SECTION RUNG LIGHTING ON AERIAL DEVICE

REV	DATE	BY	CH
V	09JUN25	ANZ	AST

CHASSIS DATA

MAKE: PIERCE

MODEL: ENFORCER

TITLE: 75 AERIAL LADDER & BODY ASSEMBLY (HAL)
-

FOR: PIERCE FIELD UNIT
APPLETON, WI

DWG NO.: 44127AD

JOB NO.	44127
SCALE	1:24
DATE	
DRAWN BY	ANZ
	29APR25
CHECKED BY	AST
	2MAY25
SHEET SIZE	D
SHEET NO.	1 OF 1

View File Created 25-JUN-2025 07:23:43