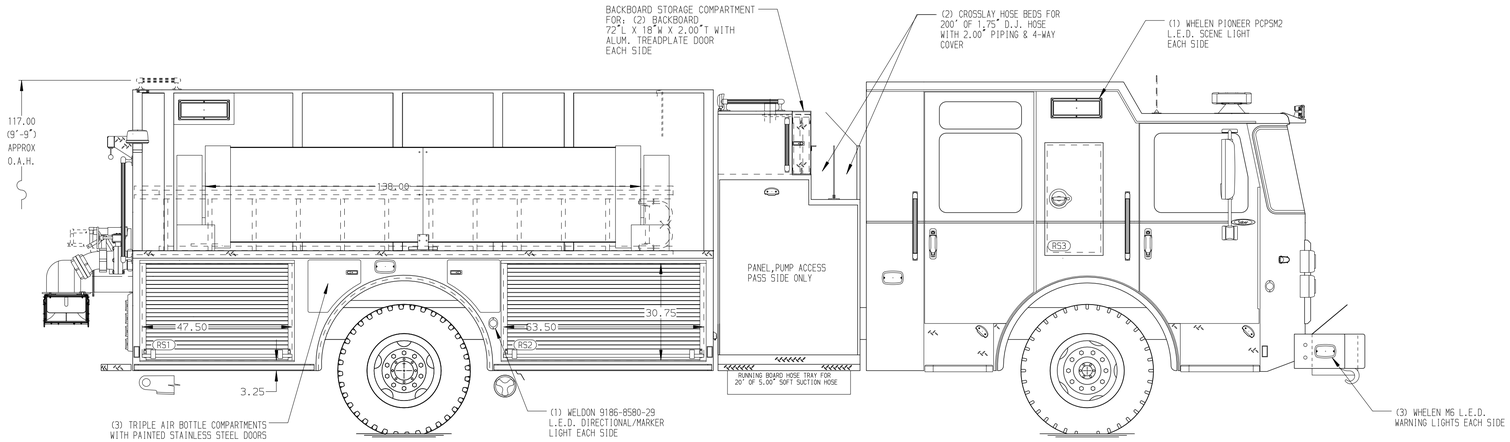

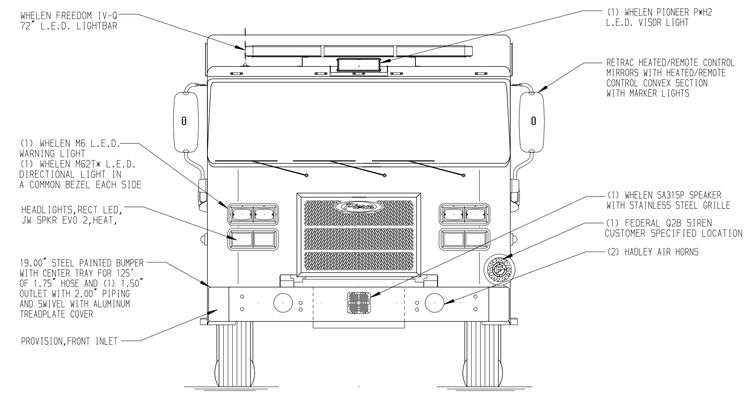

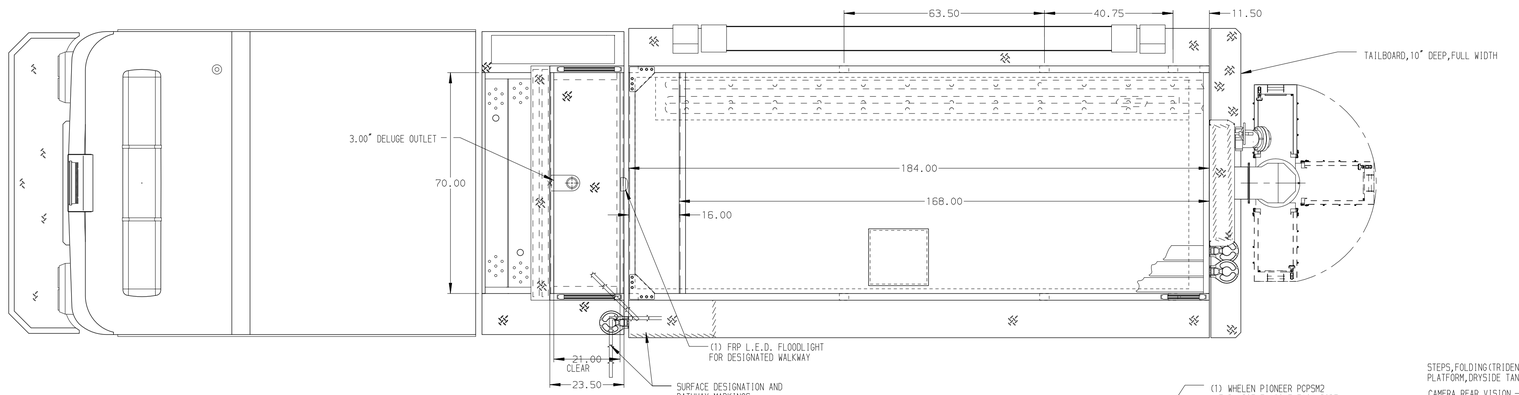

HOSEBED CAPACITIES

1. 1000' OF 5.00" D.J. POLYESTER HOSE
2. 600' OF 3.00" D.J. POLYESTER HOSE

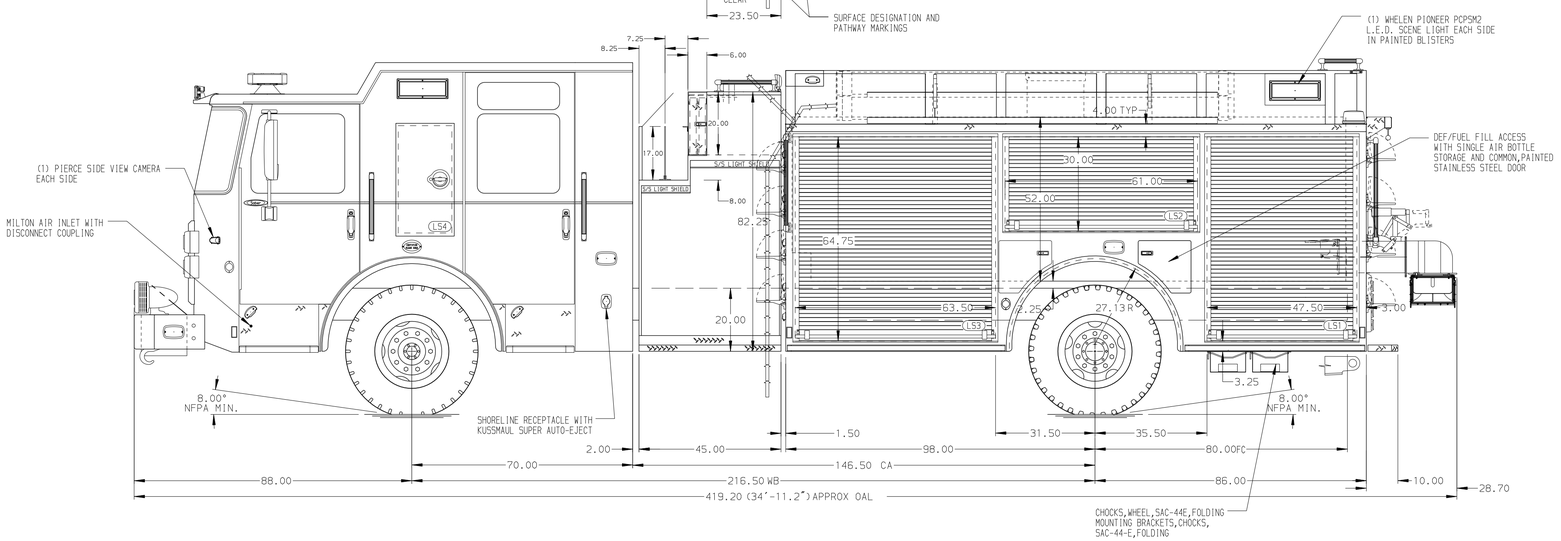

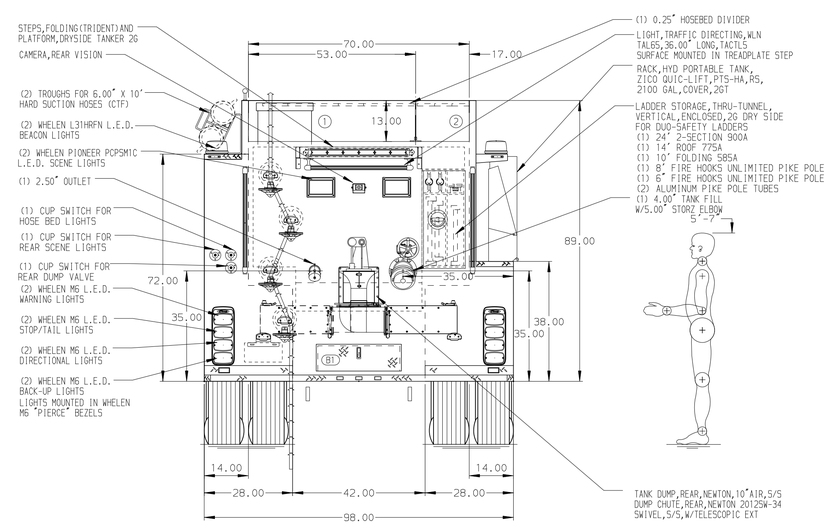

ALUMINUM BODY

SIDE ROLL AND FRONTAL IMPACT PROTECTION

NOTE

DIMENSIONS SHOWN ARE APPROXIMATE AND ARE SUBJECT TO MINOR DEVIATIONS AS MAY OCCUR OR BE NECESSARY IN CONSTRUCTION.
MINOR DETAILS NOT SHOWN.

REV	DATE	BY	CH
B	25NOV25	RHU	CGA
A	13JUN25	VHO	JAP

CHASSIS DATA
MAKE: PIERCE
MODEL: SABER FR

Pierce MANUFACTURING INC.

TITLE: 1500GPM, 1800G TANK, 1800G WATER 184" BODY TANKER, HARDWIRED
FOR: PIERCE STOCK FIELD UNIT -
DWG NO.: 44129AD

JOB NO.	44129
SCALE	1:24
DATE	
DRAWN BY	VHO 27MAR25
CHECKED BY	EEM 28MAR25
SHEET SIZE	D
SHEET NO.	1 OF 1

View File Created 26-NOV-2025 07:14:12