PUMPER

BODY
Long Aluminum 2nd Gen Pumper

CHASSIS
Enforcer Chassis

CHASSIS

AXLE,FRONT,CUSTOM
19,500 Lb TAK-4 Axle

AXLE,REAR
27,000 Lb Meritor Axle

ENGINE
510 HP Paccar MX13 Engine

TRANSMISSION
Allison 6th Gen, 4000 EVS P

BUMPER
19" Extended Painted Steel

CAB
7010 Enforcer Cab

BODY

WATER TANK
1000 Gallon Poly Water Tank

COMPT,PUMPER,REAR
30.75" FF RollUp Rear Compt

COMPT,PUMPER,LEFT SIDE
161" RollUp Full Height Front & Rear FDLER

COMPT,PUMPER,RIGHT SIDE
161" RollUp Full Height Front & Rear FDLER

FIRE SUPPRESSION

PUMPHOUSE
52" Control Zone Side Mount

PUMP
1500 GPM Waterous CSU

CROSSLAYS,1.50"
(2) 1.50" Standard Capacity

CROSSLAYS,2.50"
(1) 2.50" Standard Capacity

SPEEDLAYS
Speedlays Not Required

GENERATOR
Generator Not Required

Foam System
HUSKY 3,SINGLE AGENT

Foam Cell
25 Gallon Foam Cell

Side Roll and Frontal Impact Protection

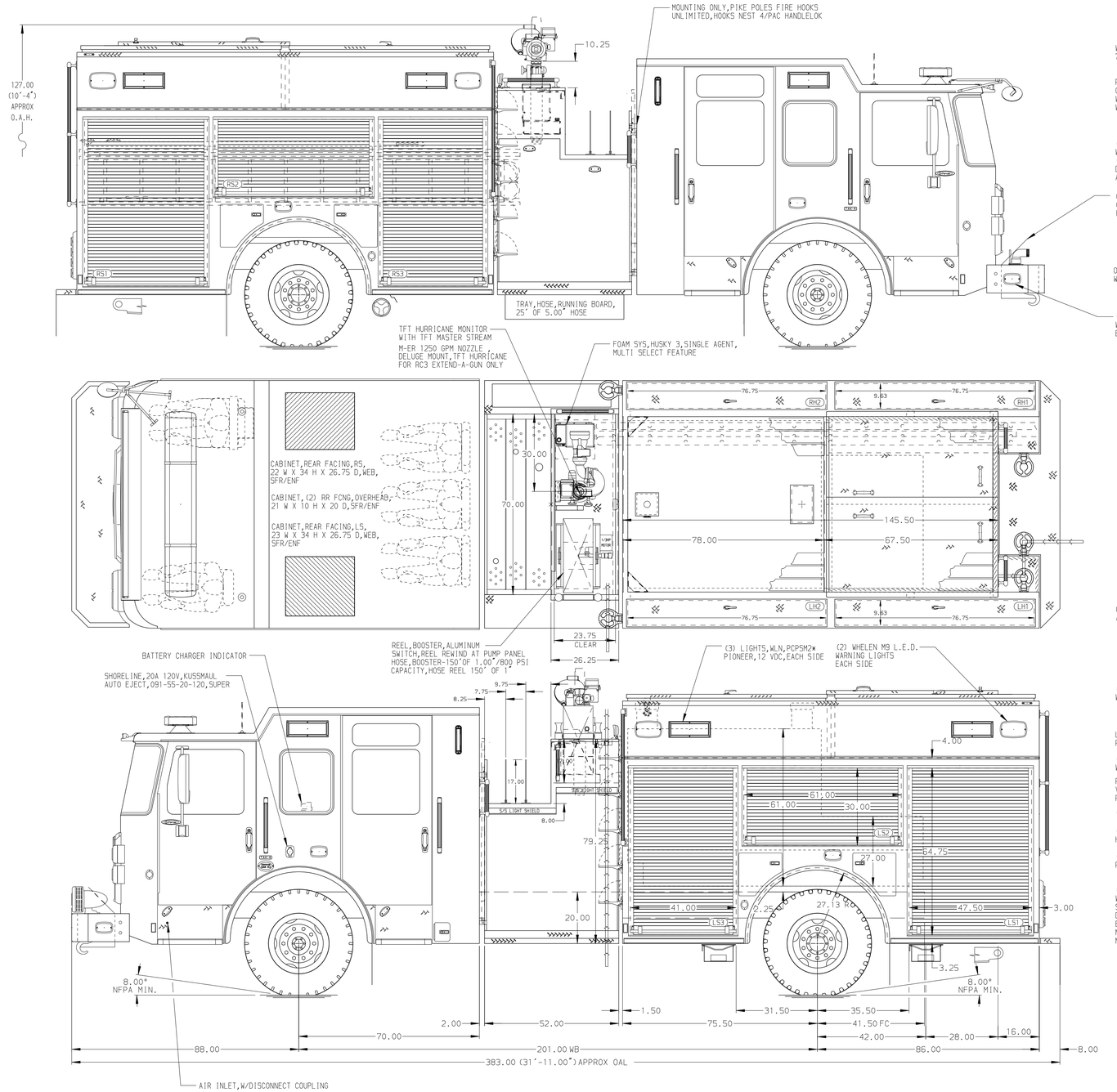

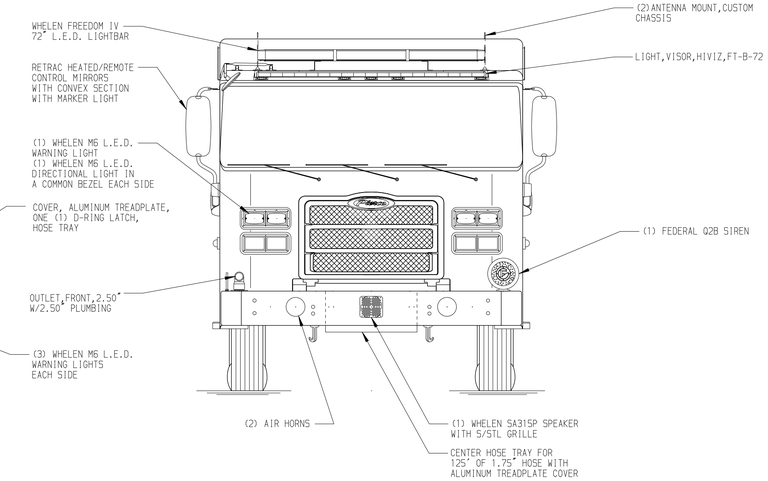

HOSEBED CAPACITY

BED 1
300' OF 3.00" D.J. POLY HOSE

BED 2
1000' OF 5.00" D.J. POLY HOSE

BED 3
250' OF 3.00" D.J. POLY HOSE

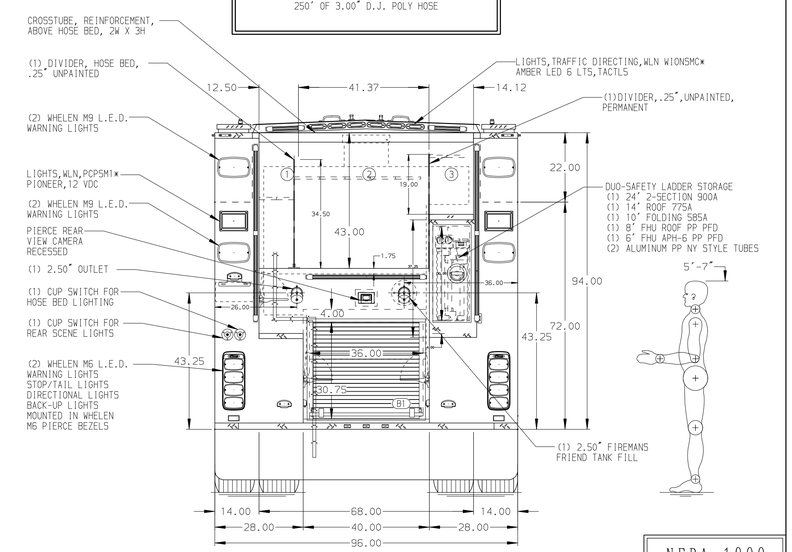

NFPA 1900 (2024) COMPLIANT

Pierce MANUFACTURING INC.

NOTE
DIMENSIONS SHOWN ARE APPROXIMATE AND ARE SUBJECT TO MINOR DEVIATIONS AS MAY OCCUR OR BE NECESSARY IN CONSTRUCTION.
MINOR DETAILS NOT SHOWN.

REV	DATE	BY	CH
B	30JUL25	ADP	CGA
A	22JUL25	ADP	DDR

CHASSIS DATA	TITLE	1500GPM, 1025G TANK, 1000G WATER, 25G FOAM 161" BODY PUMPER 2G, HARDWIRED	JOB NO. 44256
MAKE PIERCE	FOR	WHARTON VOL. FD WHARTON,TX	SCALE 1:24 / DATE
MODEL ENFORCER	DWG NO.	44256AD	DRAWN BY VHO / 10APR25
			CHECKED BY JAP / 10APR25
			SHEET SIZE D / SHEET NO. 1 OF 1

View File Created 31-JUL-2025 07:29:41