PUMPER, PUC

BODY
Pumper, PUC, Galvanneal

CHASSIS
Enforcer Chassis, PUC

ELECTRICAL SYSTEM
Hard Wired

CHASSIS

AXLE, FRONT, CUSTOM
20,000 Lb Meritor Axle

AXLE, REAR
27,000 Lb Meritor Axle

ENGINE
500 HP Cummins X12 Engine

TRANSMISSION
ALLison 6th Gen, 4000 EVS P

BUMPER
16" Extended Stainless Steel

CAB
7010 Enforcer Cab, PUC

BODY

TOTAL TANK CAPACITY
780 Gallon Poly Tank

WATER CAPACITY
750 Gallons of Water

FOAM CELL CAPACITY
30 Gallon Foam Cell

COMPT, PUMPER, REAR
50.50" FF RollUp Rear Compt w/Tailboard, PUC

COMPT, PUMPER, LEFT SIDE
177" RollUp Full Height & Depth Front & Rear, PUC

COMPT, PUMPER, RIGHT SIDE
177" RollUp Full Height & Depth Front & Rear, PUC

FIRE SUPPRESSION

PUMPHOUSE
Control Zone, PUC

PUMP
1500 GPM Pierce PUC

CROSSLAYS, 1.50"
(2) 1.50", Poly Trays, 200'

CROSSLAYS, 2.50"
(1) 2.50", Poly Tray, 200'

SPEEDLAYS
Speedlays Not Required

GENERATOR
Generator Not Required

FOAM SYSTEM
FoamPro 2001 Single Agent Foam System

SAFETY

Frontal Impact Protection

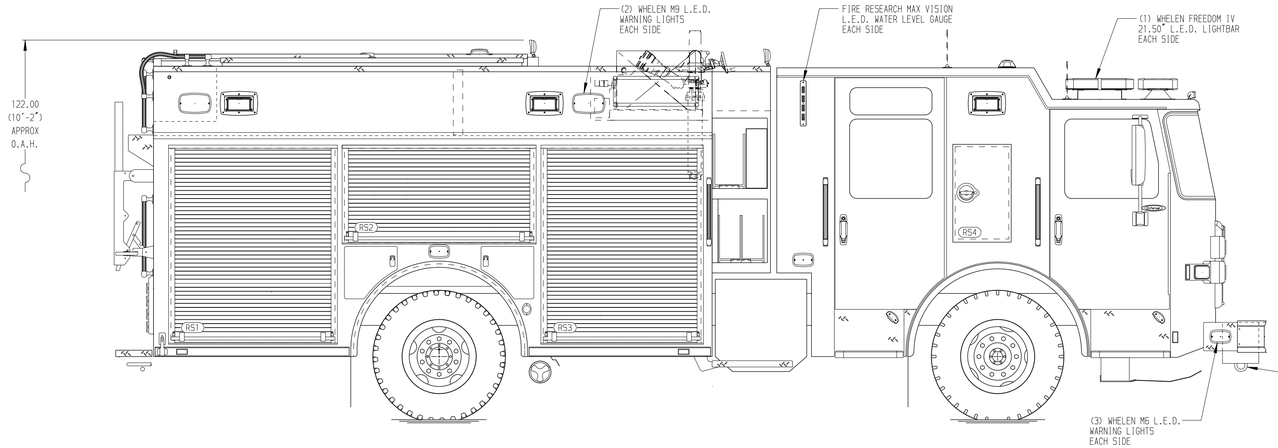

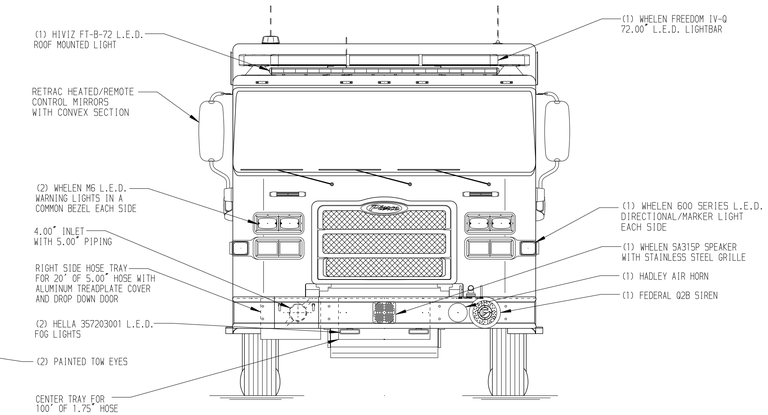

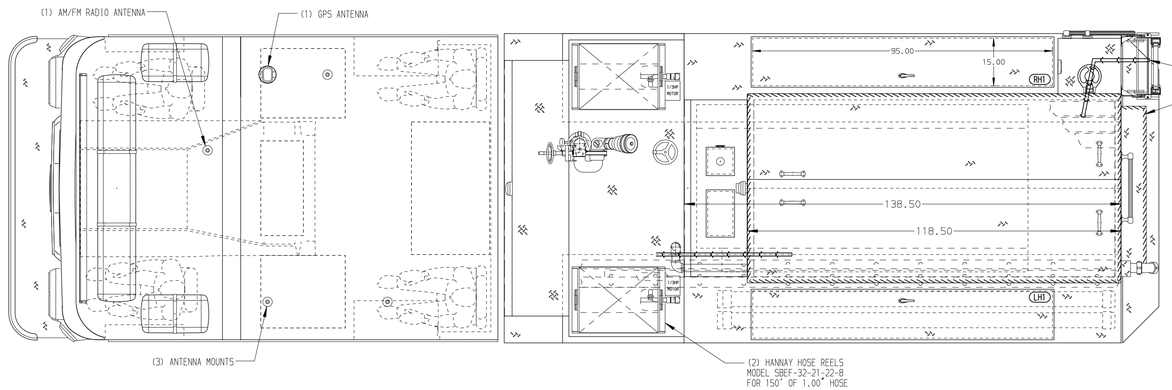

HOSEBED CAPACITIES
1. 150' OF 1.75" D.J. POLY HOSE
2. 300' OF 2.50" D.J. POLY HOSE
3. 300' OF 2.50" D.J. POLY HOSE
4. 800' OF 4.00" D.J. POLY HOSE

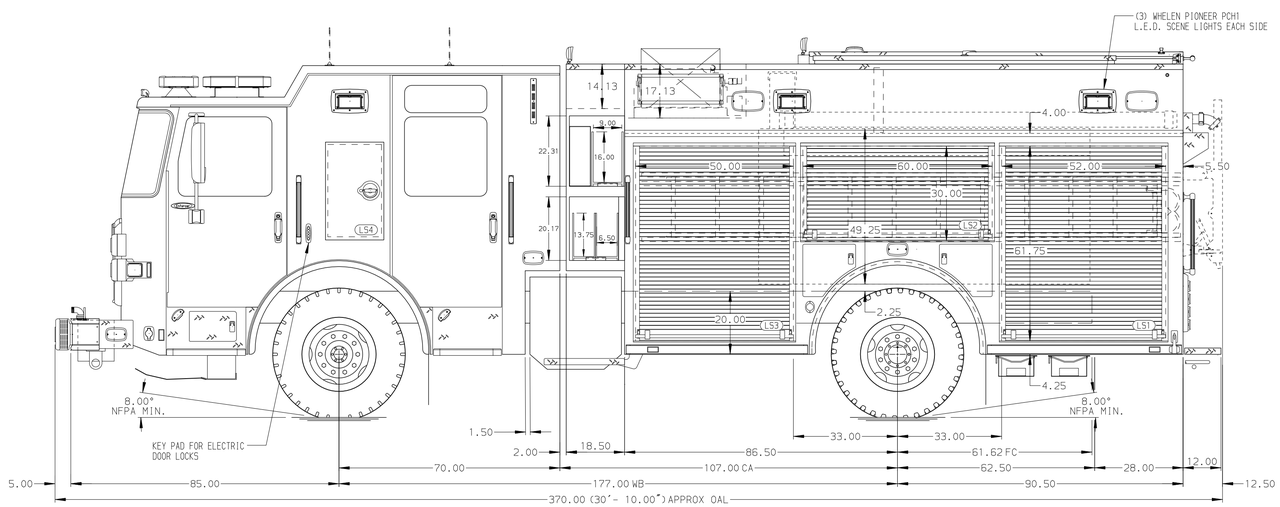

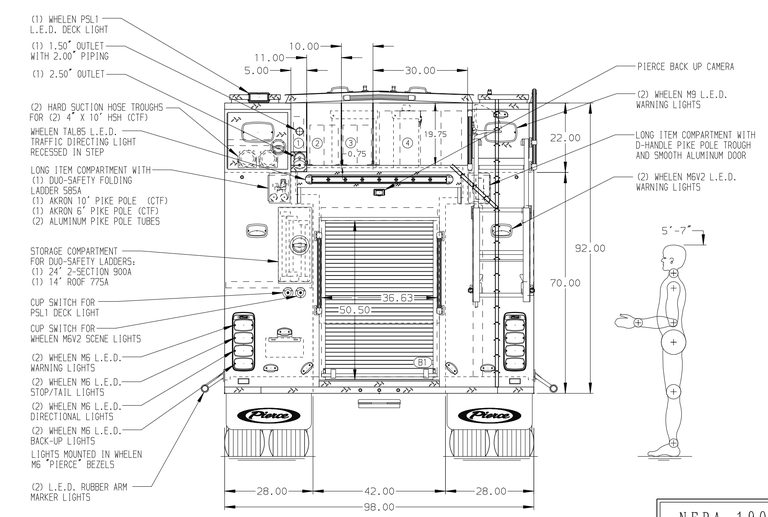

NFPA 1900 (2024) COMPLIANT

Pierce MANUFACTURING INC.

JOB NO.	44305 01 - 05
SCALE	1:24
DATE	
TITLE	Pierce Pumper Approval Drawing -
FOR	Kern County Fire Department -
DRAWN BY	SJM 21APR25
CHECKED BY	SGH 22APR25
SHEET SIZE	D
SHEET NO.	1 OF 2
DWG NO.	44305AD-SH1

REV	DATE	BY	CH
V	20NOV25	KLE	SGH
V	14JUL25	SJM	SGH
V	04JUN25	SJM	SGH

CHASSIS DATA
MAKE: PIERCE
MODEL: ENFORCER

NOTE
DIMENSIONS SHOWN ARE APPROXIMATE AND ARE SUBJECT TO MINOR DEVIATIONS AS MAY OCCUR OR BE NECESSARY IN CONSTRUCTION.
MINOR DETAILS NOT SHOWN.

1. ONE 1.50 OUTLET WITH 2.00 PIPING AND SWIVEL LOCATED ON TOP BUMPER LEFT SIDE
2. 20A 120V KUSSMAUL SUPER AUTO-EJECT SHORELINE RECEPTACLE FRONT CORNER DRIVERS SIDE CAB
3. AIR INLET WITH DISCONNECT COUPLING RECESSED IN ALUMINUM BOX IN DRIVERS STEP WELL
4. BATTERY CHARGER/INVERTER LOCATED PER ORDER

View File Created 20-NOV-2025 14:51:42