PUMPER

BODY
Long Aluminum 2nd Gen Pumper

CHASSIS
Saber FR Chassis

CHASSIS

AXLE, FRONT, CUSTOM
18,000 Lb TAK-4 Axle

AXLE, REAR
27,000 Lb Meritor Axle

ENGINE
450 HP Cummins L9 Engine

TRANSMISSION
Allison 6th Gen, 3000 EVS P

BUMPER
19" Extended Painted Steel Reinforced

CAB
7010 Enforcer FR Cab

BODY

WATER TANK
1000 Gallon New York Style Poly Tank

COMPT, PUMPER, REAR
30.75" FF Rollup Rear Compt

COMPT, PUMPER, LEFT SIDE
161" Rollup Full Height Front & Rear FDLER

COMPT, PUMPER, RIGHT SIDE
161" Rollup Full Height Front & Rear FDLER

FIRE SUPPRESSION

PUMPHOUSE
45" Control Zone Side Mount

PUMP
1500 GPM Waterous CSU

CROSSLAYS, 1.50"
(2) 1.50" Standard Capacity

CROSSLAYS, 2.50"
(1) 2.50" Standard Capacity

SPEEDLAYS
Speedlays Not Required

GENERATOR
Generator Not Required

Foam System
Provisions for Future Husky 3/12

Foam Cell
20 Gallon Foam Cell

Side Roll and Frontal Impact Protection

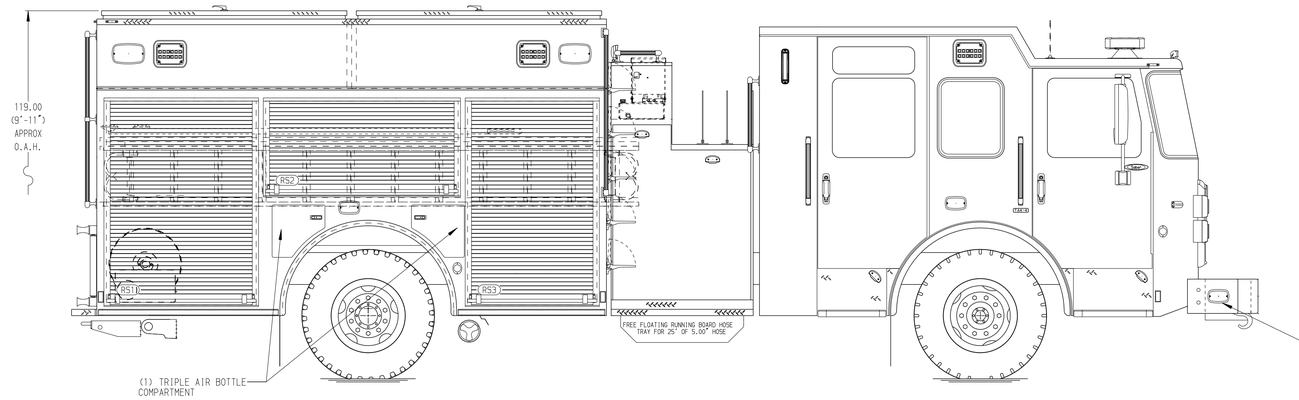

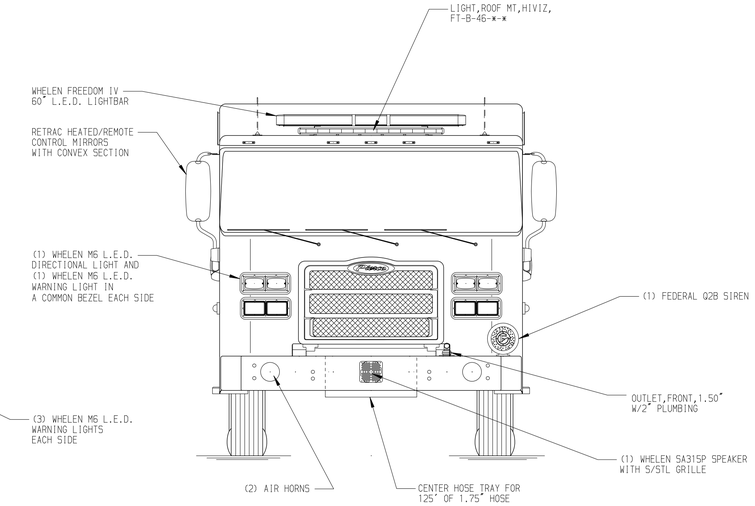

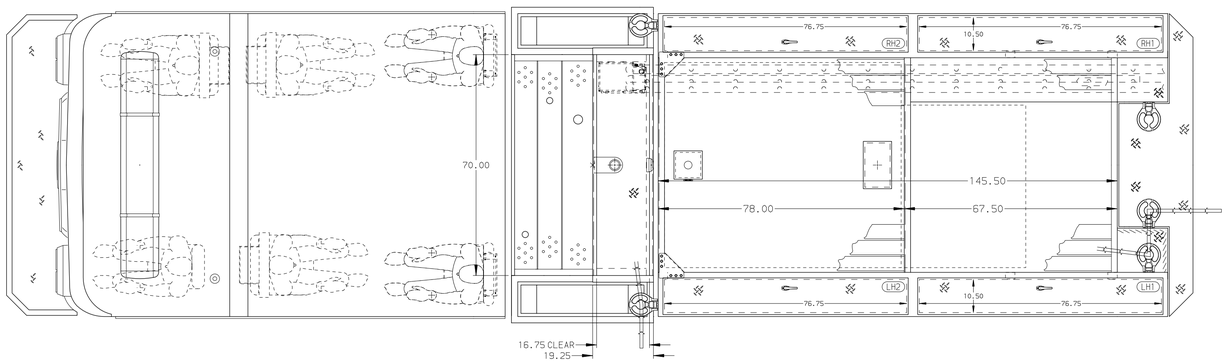

HOSEBED CAPACITY

BED 1
300' OF 2.50" D.J. POLY HOSE

BED 2
1000' OF 5.00" D.J. POLY HOSE

BED 3
300' OF 2.50" D.J. POLY HOSE

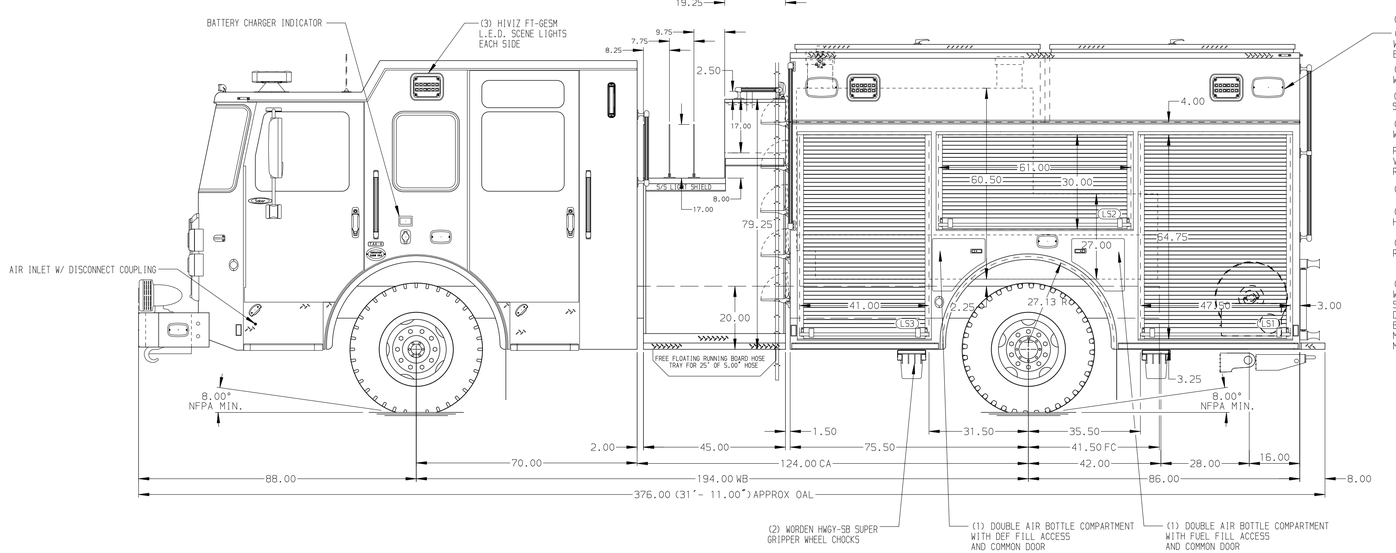

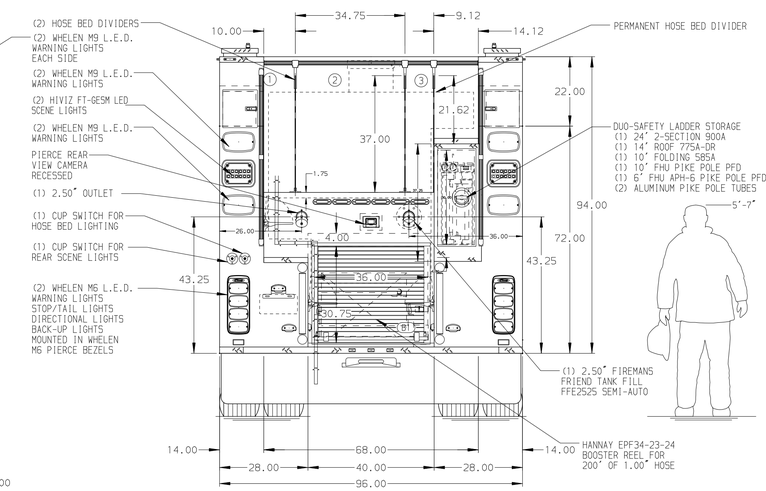

NOTE
DIMENSIONS SHOWN ARE APPROXIMATE AND ARE SUBJECT TO MINOR DEVIATIONS AS MAY OCCUR OR BE NECESSARY IN CONSTRUCTION.
MINOR DETAILS NOT SHOWN.

REV	DATE	BY	CH
1	15AUG25	RHU	-

CHASSIS DATA	TITLE	Pierce Pumper Approval Drawing -	JOB NO. 44385
MAKE PIERCE	FOR	NEWBERRY COUNTY NEWBERRY, SOUTH CAROLINA	SCALE 1:24 / DATE
MODEL SABER FR	DWG NO.	44385AD	DRAWN BY ADP 29APR25
			CHECKED BY JAP 29APR25
			SHEET SIZE D / SHEET NO. 1 OF 1

Pierce MANUFACTURING INC.

View File Created 15-AUG-2025 13:57:40