PUMPER, PUC

BODY
Pumper, PUC, Aluminum

CHASSIS
Impel Chassis, PUC

ELECTRICAL SYSTEM
MUX

CHASSIS

AXLE, FRONT, CUSTOM
19,500 Lb TAK-4 Axle

AXLE, REAR
30,000 Lb Meritor Axle

ENGINE
510 HP Paccar MX13 Engine

TRANSMISSION
Allison 6th Gen, 4000 EVS P

BUMPER
26" Extended Painted Steel Underslung

CAB
7010 Impel FR Cab, PUC

BODY

TOTAL TANK CAPACITY
780 Gallon Poly Tank

WATER CAPACITY
750 Gallons of Water

FOAM CELL CAPACITY
30 Gallon Foam Cell

COMPT, PUMPER, REAR
29.50" FF Rollup Rear Compt w/Tailboard, PUC

COMPT, PUMPER, LEFT SIDE
189" Rollup Full Height & Depth Front & Rear, PUC

COMPT, PUMPER, RIGHT SIDE
189" Rollup Full Height & Depth Front & Rear, PUC

FIRE SUPPRESSION

PUMPHOUSE
Control Zone, PUC

PUMP
2000 GPM Pierce PUC

CROSSLAYS, 1.50"
(2) 1.50", Poly Trays, 200'

CROSSLAYS, 2.50"
2.50" Crosslays Not Required

SPEEDLAYS

GENERATOR
Generator Not Required

FOAM SYSTEM
External Foam System

SAFETY

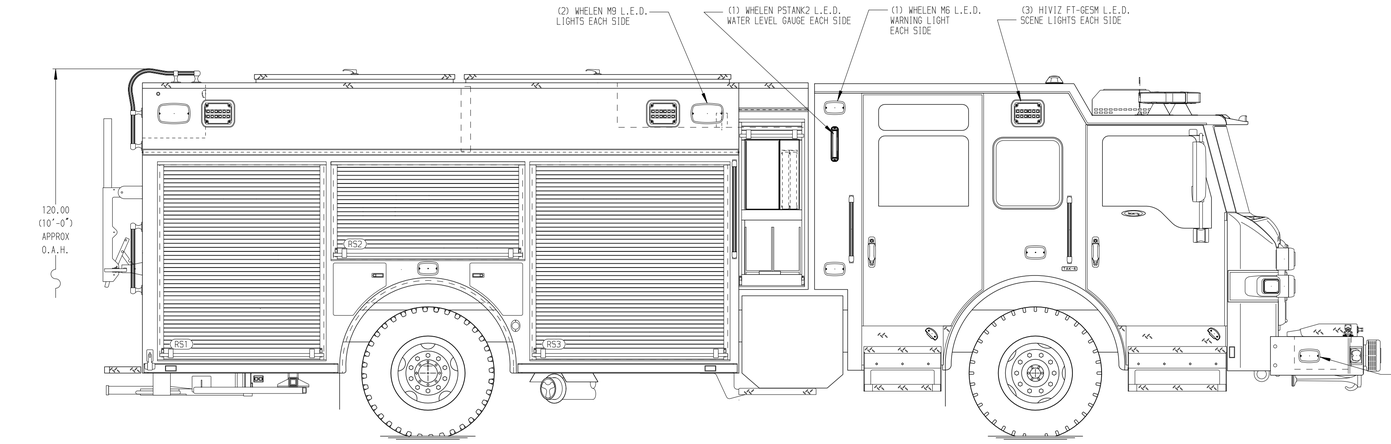

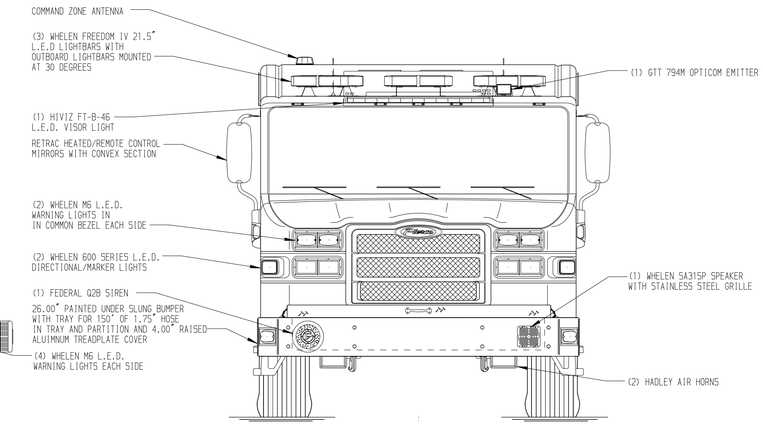

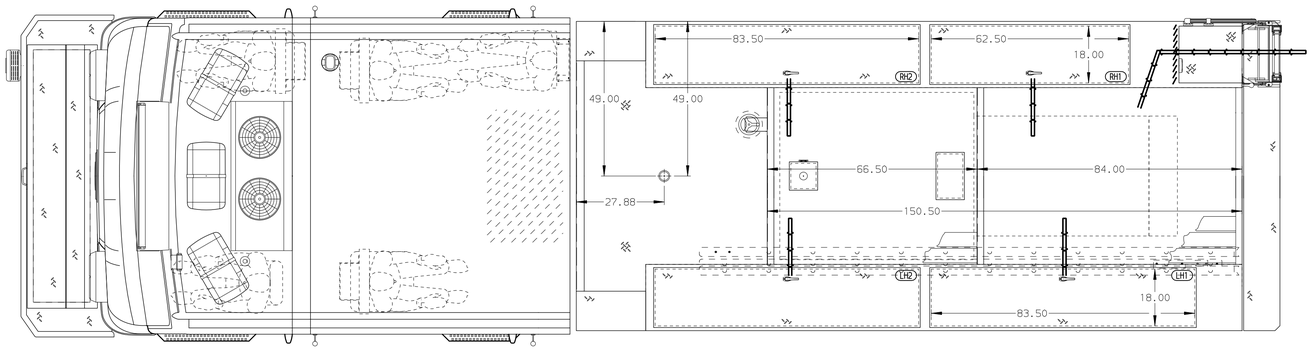

HOSEBED CAPACITIES
1. 300' OF 1.75" D.J. POLY HOSE
2. 200' OF 2.50" D.J. POLY HOSE
3. 1000' OF 5.00" D.J. POLY HOSE
4. 700' OF 2.50" D.J. POLY HOSE

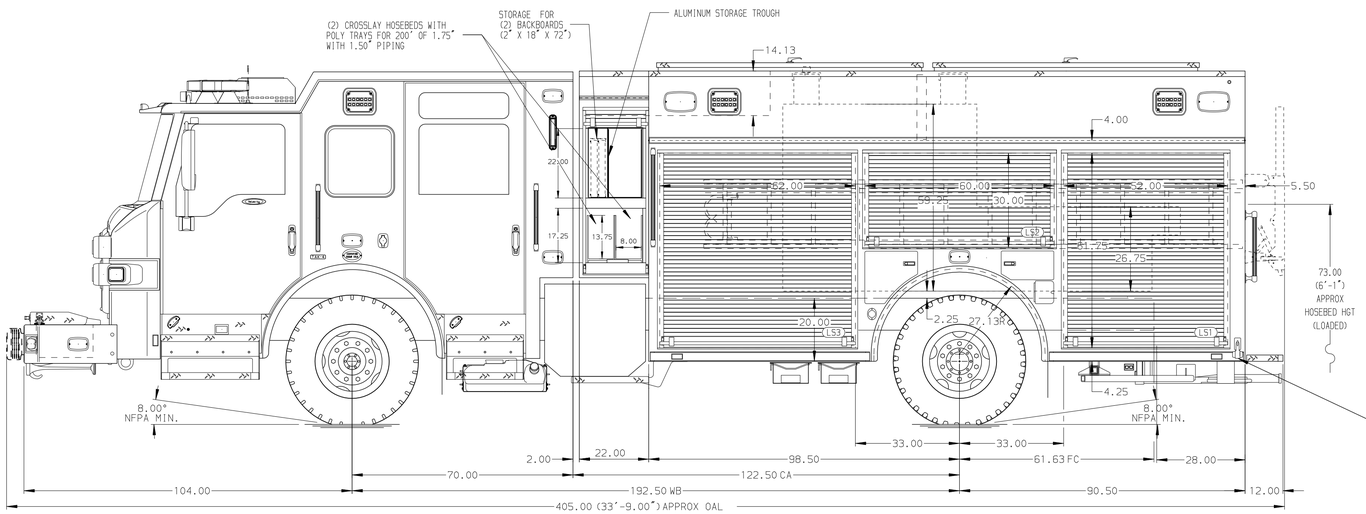

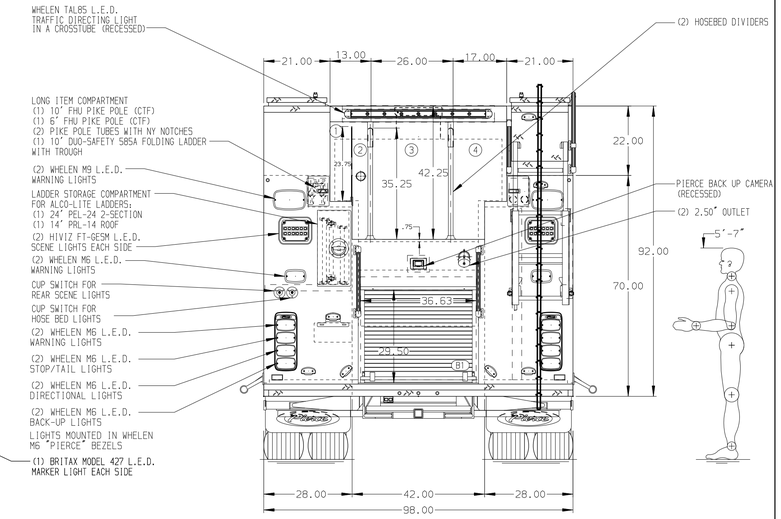

NOTE
DIMENSIONS SHOWN ARE APPROXIMATE AND ARE SUBJECT TO MINOR DEVIATIONS AS MAY OCCUR OR BE NECESSARY IN CONSTRUCTION.
MINOR DETAILS NOT SHOWN.

1. ONE 1.50 OUTLET WITH 2.00 PIPING AND SWIVEL LOCATED IN CENTER BUMPER TRAY
2. SHORELINE RECEPTACLE WITH KUSSMAUL SUPER AUTO-EJECT LOCATED ON DRIVER SIDE OF THE CAB
3. AIR INLET WITH DISCONNECT COUPLING IN THE DRIVER SIDE STEPWELL
4. BATTERY CHARGER LOCATED BEHIND DRIVER'S SEAT

REV	DATE	BY	CH
V	20JUN25	MMF	JJR
V	23MAY25	MMF	JJR
V	22APR25	MMF	JJR

CHASSIS DATA
MAKE: PIERCE
MODEL: VELOCITY

Pierce MANUFACTURING INC.

TITLE: PIERCE PUMPER APPROVAL DRAWING
–
FOR: SEMINOLE COUNTY FIRE DEPARTMENT
–
DWG NO.: 44444AD-SH1

JOB NO.	44444 01-02
SCALE	1:24
DATE	
DRAWN BY	MMF 17APR25
CHECKED BY	JJR 21APR25
SHEET SIZE	D
SHEET NO.	1 OF 1

View File Created 20-JUN-2025 14:01:01