PUMPER

BODY
Long Aluminum 2nd Gen Pumper

CHASSIS
Saber FR Chassis

CHASSIS

AXLE,FRONT,CUSTOM
19,500 lb Oshkosh Tak-4 Axle

AXLE,REAR
27,000 lb Dana Axle

ENGINE
PACCAR MX13,510HP,1850LB-FTW/OBD,EPA,2024

TRANSMISSION
ALlison 6th Gen, 4000 EVS P,W/PROGNOSTICS TRANSMISSION,SHIFTER,6-SPD,PUSH BUTTON

BUMPER
19" Extended Steel Painted

CAB
7010 Saber FR Cab

BODY

WATER TANK
1000 Gallon New York Style Water Tank

COMPT,PUMPER,REAR
23.50" FF RollUp Rear Compt

COMPT,PUMPER,LEFT SIDE
171" RollUp Full Height & Depth Front & Rear Cleaveland Notch 12"

COMPT,PUMPER,RIGHT SIDE
171" RollUp Full Height & Depth Front & Rear Cleaveland Notch 12"

FIRE SUPPRESSION

PUMPHOUSE
45" Control Zone Side Mount

PUMP
2000 GPM Waterous CSU

CROSSLAYS,1.50"
(2) 1.50" Standard Capacity

CROSSLAYS,2.50"
(1) 2.50" Standard Capacity

SPEEDLAYS
Speedlays Not Required

GENERATOR
Generator Not Required

Foam System
Husky 3 Single Agent Foam System

Foam Cell
Foam Cell 20 GALLON

SAFETY

-

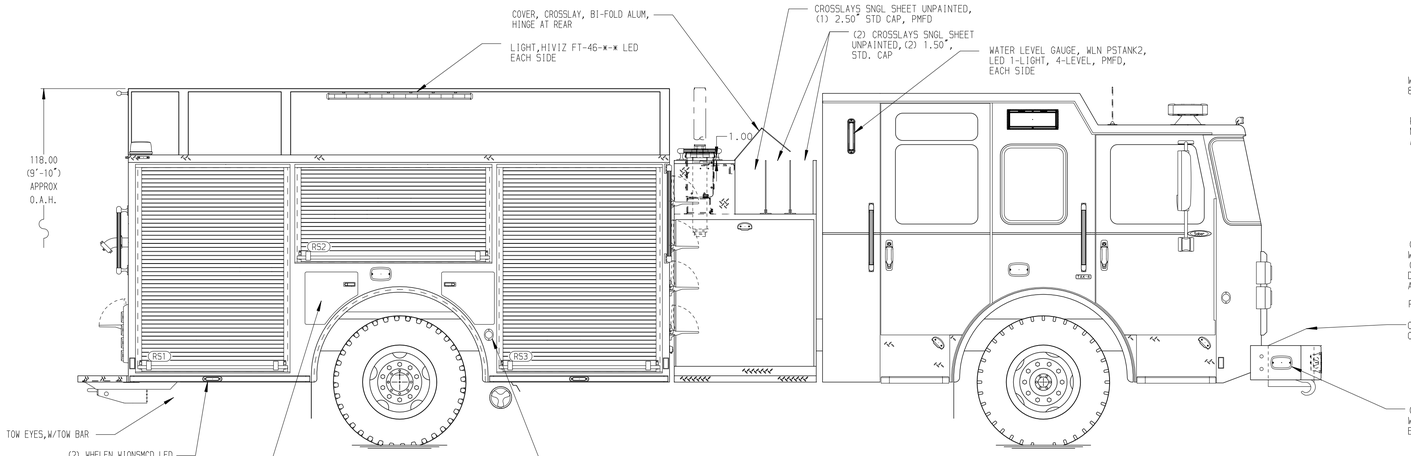

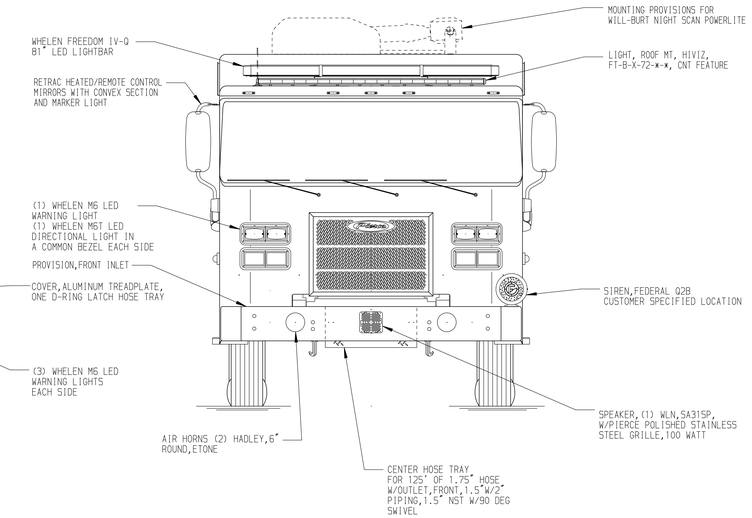

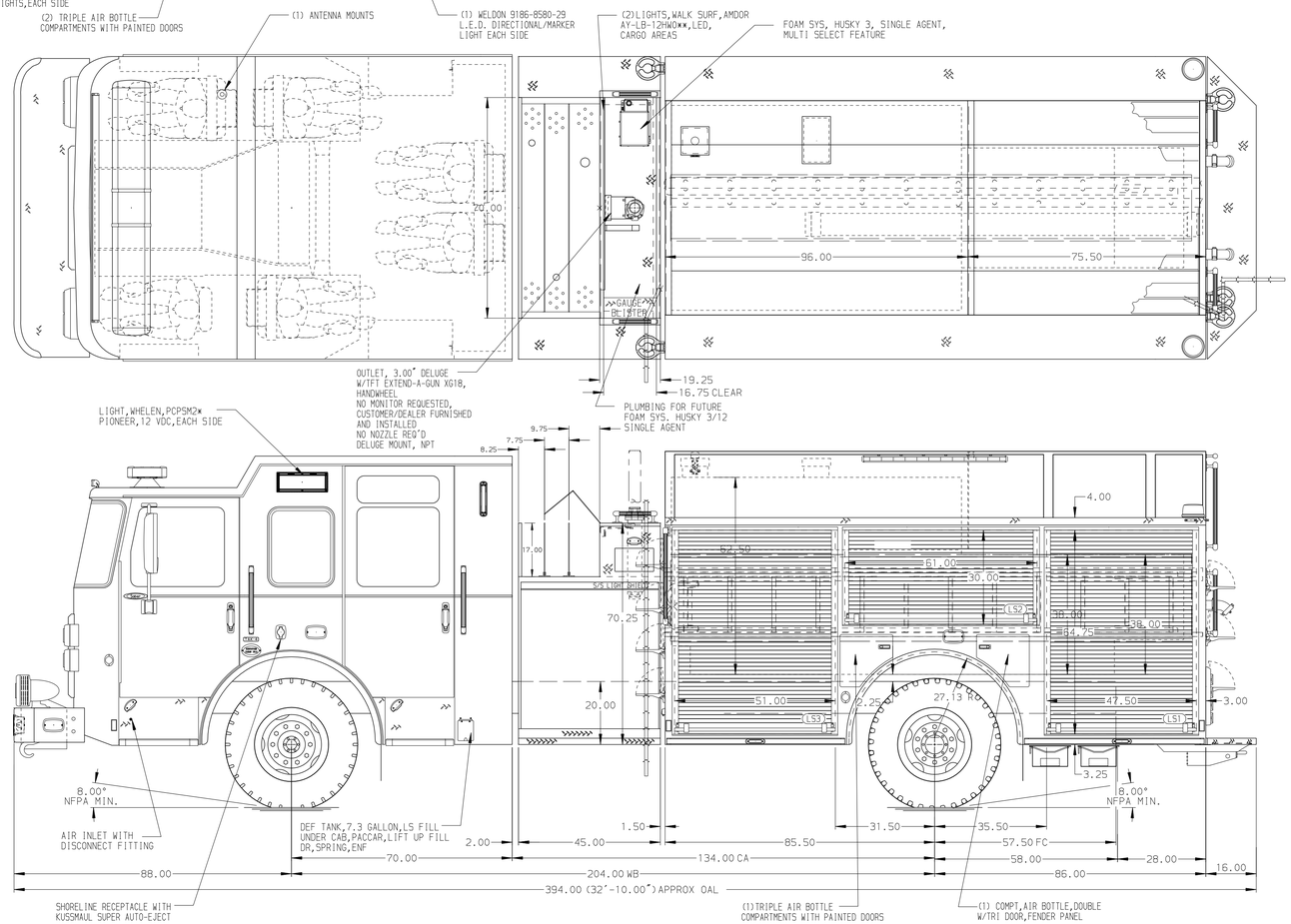

HOSEBED CAPACITIES

1. 400' OF 3.00" D.J. POLY HOSE
2. 1000' OF 5.00" D.J. POLY HOSE

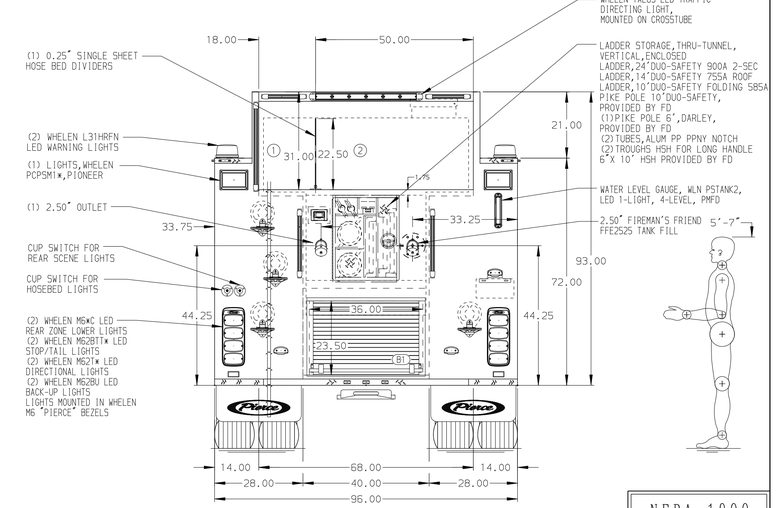

NFPA 1900 (2024) COMPLIANT

MAXIMUM O.A.H. 9'10"=118.00"

NOTE

DIMENSIONS SHOWN ARE APPROXIMATE AND ARE SUBJECT TO MINOR DEVIATIONS AS MAY OCCUR OR BE NECESSARY IN CONSTRUCTION.
MINOR DETAILS NOT SHOWN.

REV	DATE	BY	CH
▽	25AUG25	VHO	CGA

CHASSIS DATA	TITLE	2000GPM, 1020G TANK, 1000G WATER, 20G FOAM 171" BODY PUMPER 2G, HARDWIRED	
MAKE PIERCE	FOR	MADISON TWP GIBSONBURG, OHIO	
MODEL SABER FR	DWG NO.	44476AD	

Pierce MANUFACTURING INC.

JOB NO.	44476
SCALE 1:24	DATE
DRAWN BY VHO	08MAY25
CHECKED BY JAP	12MAY25
SHEET SIZE D	SHEET NO. 1 OF 1

View File Created 27-AUG-2025 13:36:01