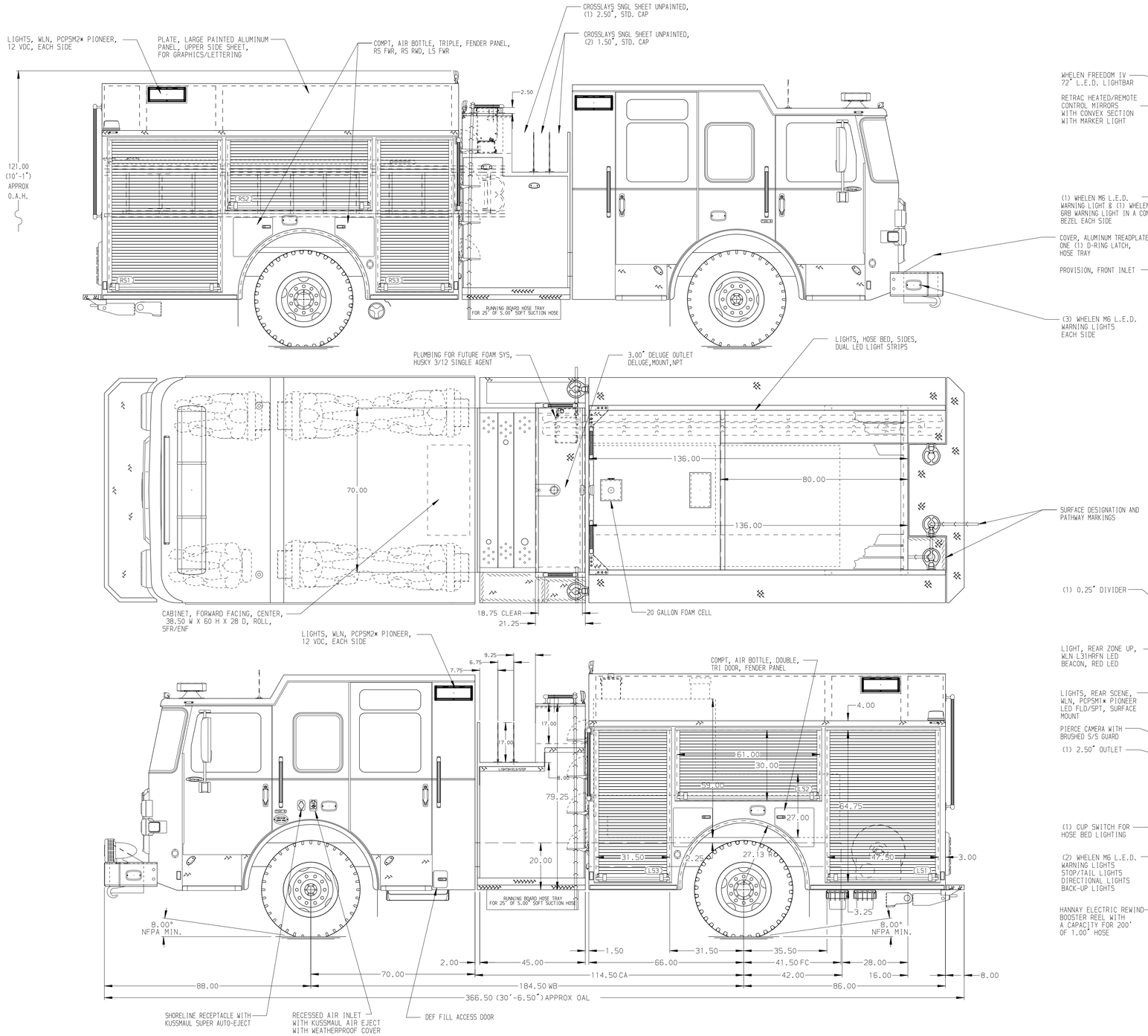


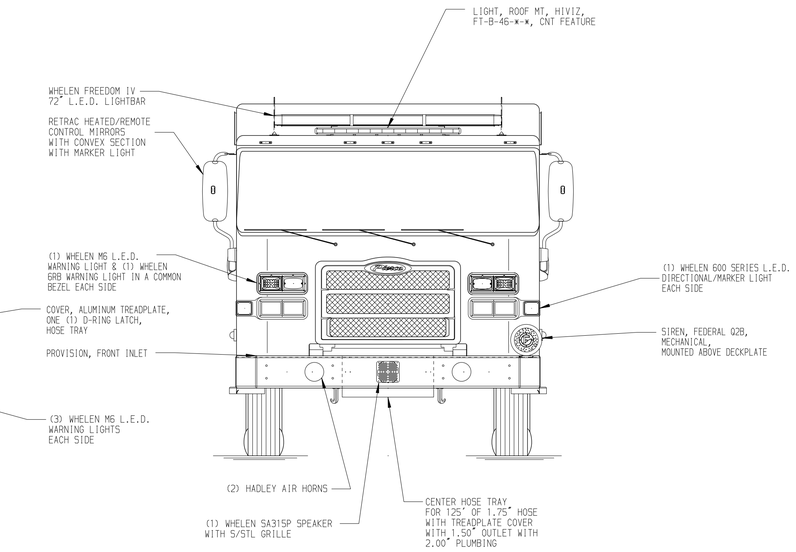


HOSEBED CAPACITIES

1. 300' OF 2.5"
2. 800' OF 5" DJ POLY HOSE
3. 300' OF 2.5"
4. 300' OF 1.5"

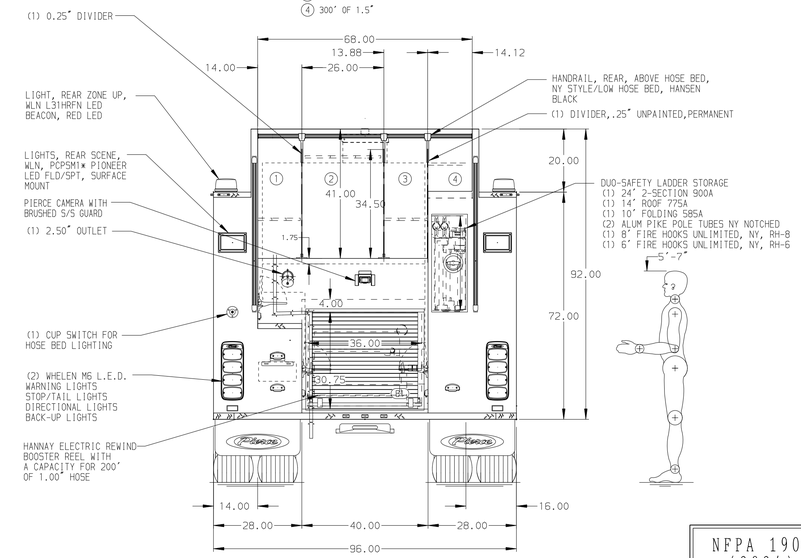


NFPA 1900 (2024) COMPLIANT

ALUMINUM BODY

NOTE

DIMENSIONS SHOWN ARE APPROXIMATE AND ARE SUBJECT TO MINOR DEVIATIONS AS MAY OCCUR OR BE NECESSARY IN CONSTRUCTION.
MINOR DETAILS NOT SHOWN.

| REV | DATE | BY | CH |
|---|---|---|---|
| V | 16OCT25 | TYB | CGA |

CHASSIS DATA — MAKE: PIERCE — MODEL: ENFORCER

**Pierce MANUFACTURING INC.**

TITLE: 1500GPM, 750G TANK, 730G WATER, 20G FOAM 152" PUMPER, HARDWIRED

FOR: PIERCE FIELD UNIT – –

DWG NO.: 44481AD

| | |
|---|---|
| JOB NO. | 44481 |
| SCALE | 1:24 |
| DATE | |
| DRAWN BY | VHO |
| 10JUL25 | |
| CHECKED BY | JAP |
| 11JUL25 | |
| SHEET SIZE | D |
| SHEET NO. | 1 OF 1 |

View File Created 17-OCT-2025 13:26:31