PUMPER

BODY
Medium Aluminum 2nd Gen Pumper

CHASSIS
Saber FR Chassis

CHASSIS

AXLE, FRONT, CUSTOM
18,000 Lb Dana Axle

AXLE, REAR
27,000 Lb Dana Axle

ENGINE
510 HP Paccar MX13 Engine

TRANSMISSION
ALLison 6th Gen, 4000 EVS P

BUMPER
19" Extended Stainless Steel

CAB
7010 Saber FR Cab

BODY

TOTAL TANK CAPACITY
920 Gallon Poly Tank

WATER CAPACITY
900 Gallons of Water

FOAM CELL CAPACITY
20 Gallon Foam Cell

COMPT, PUMPER, REAR
30.75" FF Rollup Rear Compt

COMPT, PUMPER, LEFT SIDE
152" Lap Full Height Front & Rear FDLER

COMPT, PUMPER, RIGHT SIDE
152" Lap Full Height & Depth Front & Rear BIB

FIRE SUPPRESSION

PUMPHOUSE
48" Control Zone Side Mount

PUMP
1500 GPM Waterous CSU

CROSSLAYS, 1.50"
(2) 1.50" Standard Capacity

CROSSLAYS, 2.50"
2.50" Crosslay Not Required

SPEEDLAYS
Speedlays Not Required

GENERATOR
Generator Not Required

FOAM SYSTEM
Husky 3 Single Agent Foam System

SAFETY

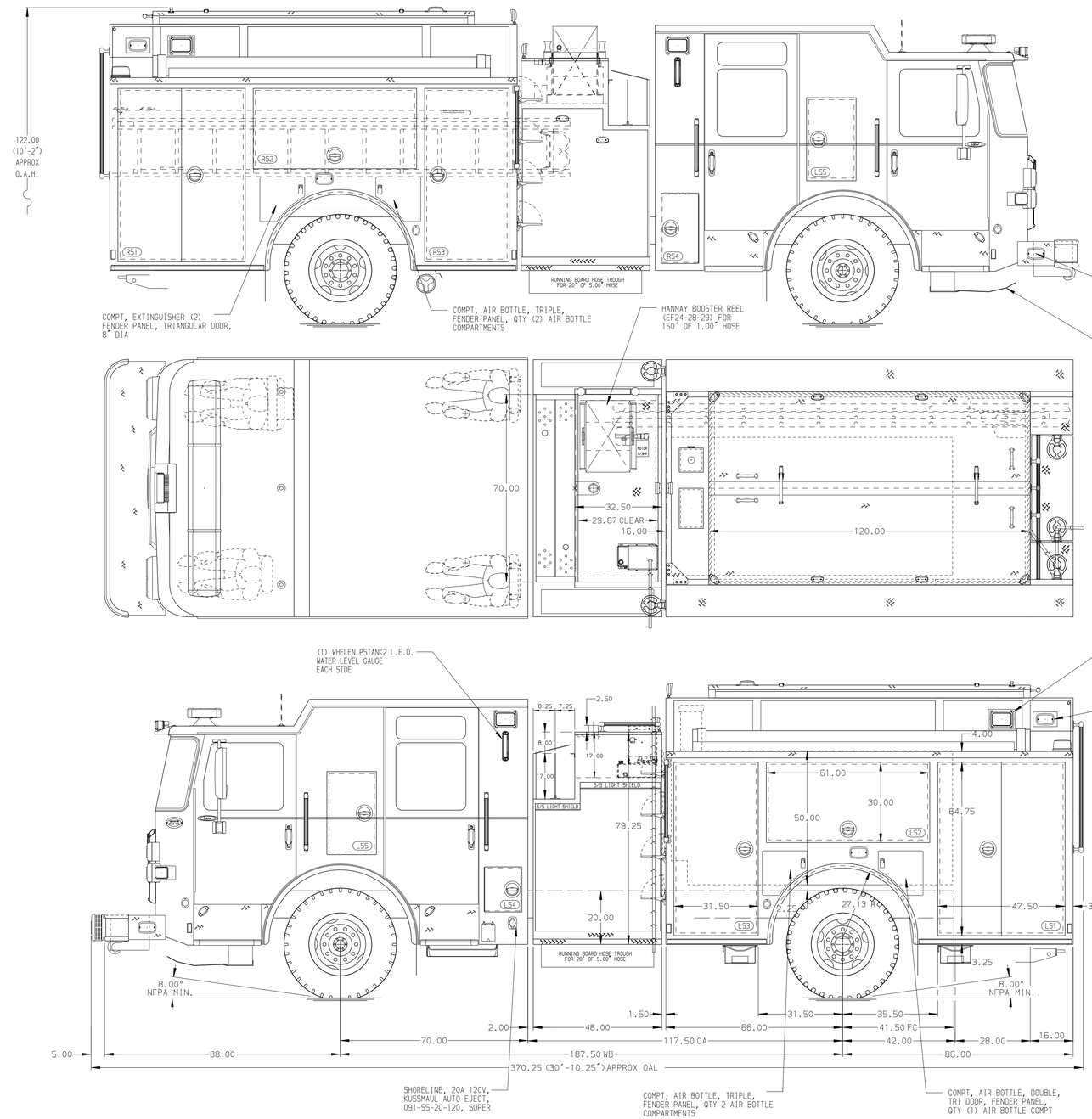

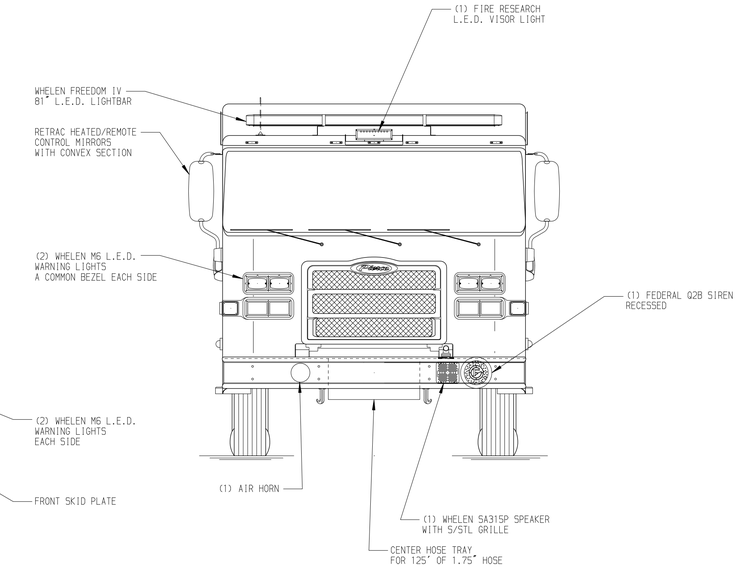

HOSEBED CAPACITIES

1. 200' OF 2.50" D.J. POLY HOSE
2. 800' OF 5.00" D.J. POLY HOSE
3. 600' OF 3.00" D.J. POLY HOSE
4. 100' OF 1.50" D.J. POLY HOSE

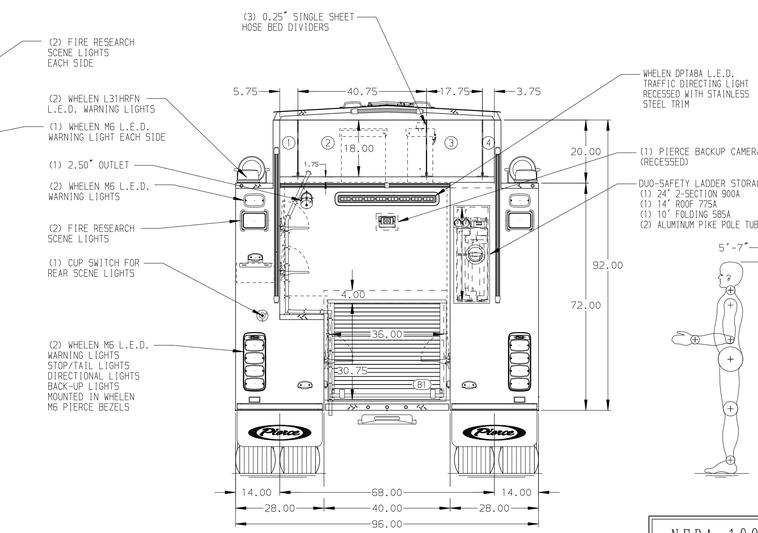

NFPA 1900
(2024)
COMPLIANT

Pierce MANUFACTURING INC.

NOTE

DIMENSIONS SHOWN ARE APPROXIMATE AND ARE SUBJECT TO MINOR DEVIATIONS AS MAY OCCUR OR BE NECESSARY IN CONSTRUCTION.
MINOR DETAILS NOT SHOWN.

REV	DATE	BY	CH
1	17NOV25	TYB	CGA
0	2FEB25	RHU	CGA

CHASSIS DATA	TITLE	Pierce Pumper Approval Drawing -	JOB NO. 44600
MAKE PIERCE	FOR	Lathrop Manteca Fire District -	SCALE 1:24 / DATE
MODEL SABER FR	DWG NO.	44600AD	DRAWN BY MMF 14AUG25
			CHECKED BY AMI 15AUG25
			SHEET SIZE D / SHEET NO. 1 OF 1

View File Created 18-NOV-2025 07:35:13