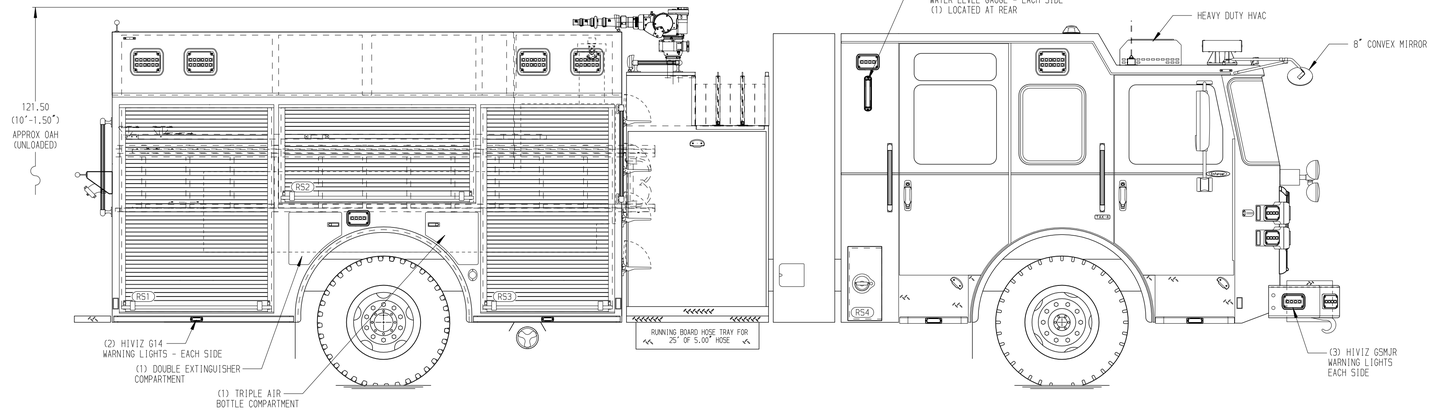

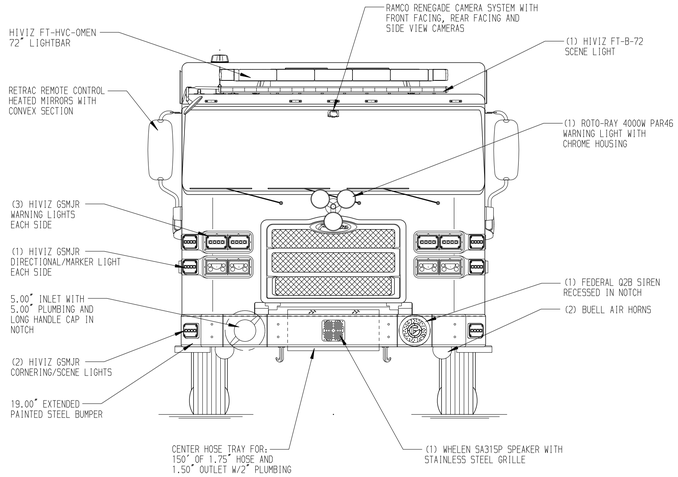

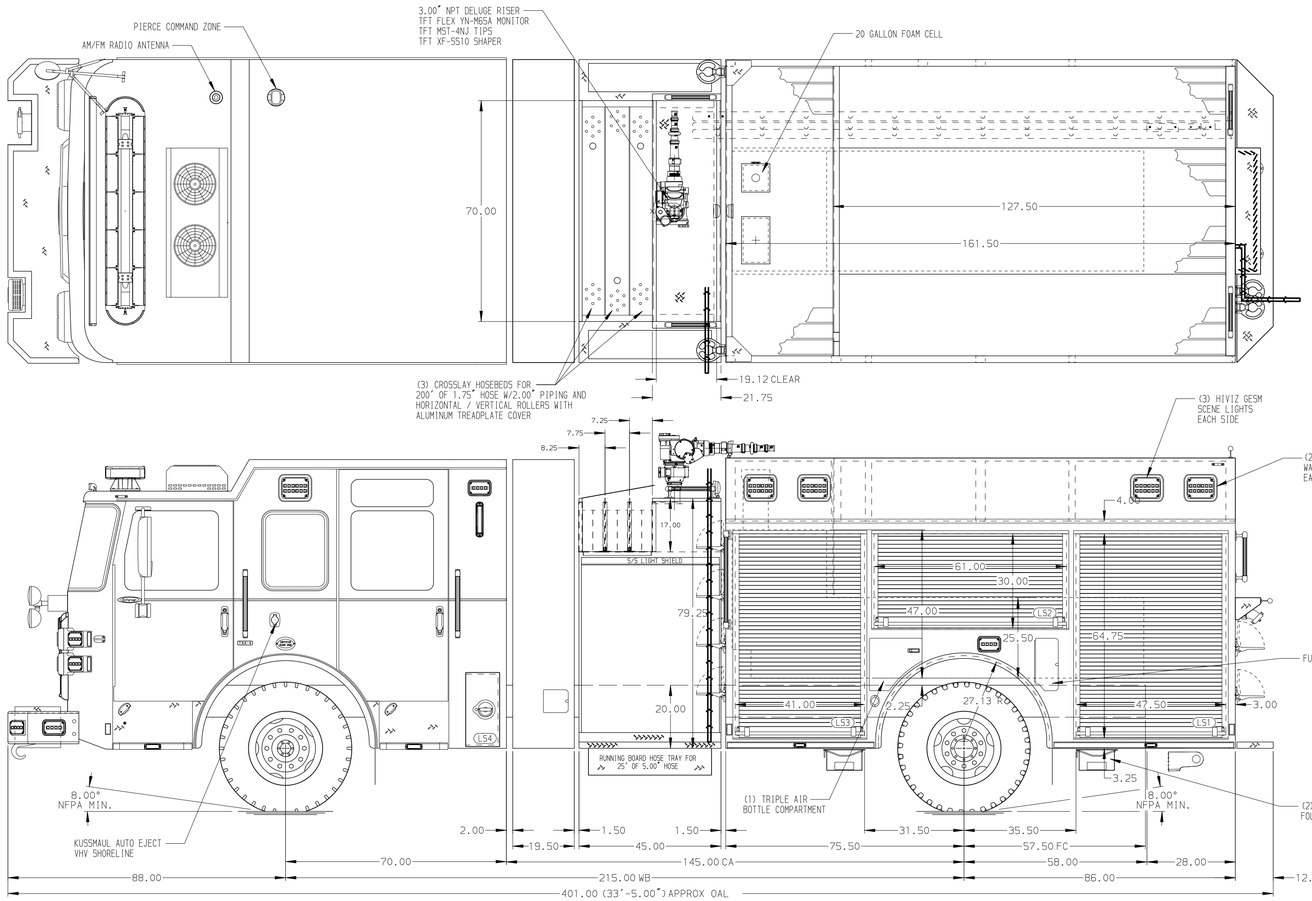

HOSEBED CAPACITIES

1. - 200' OF 2.50" DJP HOSE
2. - 1000' OF 5.00" DJP HOSE
3. - 400' OF 3.00" DJP HOSE
4. - 600' OF 3.00" DJP HOSE

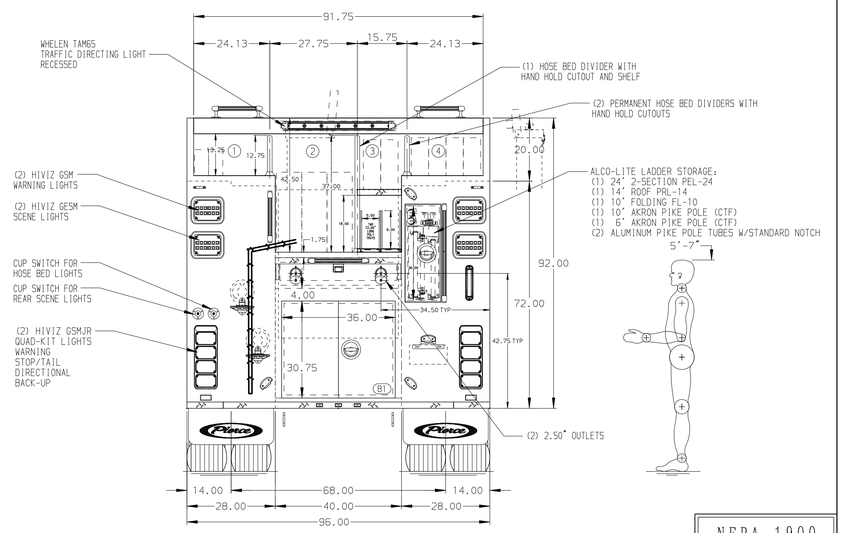

ALUMINUM BODY

AIR RIDE REAR SUSPENSION

NFPA 1900 (2024) COMPLIANT

NOTE

DIMENSIONS SHOWN ARE APPROXIMATE AND ARE SUBJECT TO MINOR DEVIATIONS AS MAY OCCUR OR BE NECESSARY IN CONSTRUCTION.
MINOR DETAILS NOT SHOWN.

1. ONSPOT AUTOMATIC TIRE CHAINS TO BE PROVIDED AT REAR
2. AIR INLET WITH DISCONNECT COUPLING LOCATED IN DRIVER'S SIDE STEPWELL FORWARD
3. AIR COMPRESSOR LOCATED BEHIND DRIVER'S SEAT
4. BATTERY CHARGER LOCATED BEHIND DRIVER'S SEAT
5. BATTERY CHARGE INDICATOR LOCATED ON DRIVER'S SEAT RISER
6. TWO TECNIQ EGN EO3 LIGHTS BEHIND PANEL TO ILLUMINATE FIRE DEPARTMENT NAME PER ORDER
7. ROLLED HOSE STOAGE RACK LOCATED IN BODY COMPARTMENT PER ORDER
8. AIR BAG RACK LOCATED IN BODY COMPARTMENT PER ORDER
9. EXTERNAL FOAM SYSTEM
10. ONE RECEPTACLE STRIP LOCATED IN BODY COMPARTMENT PER ORDER

REV	DATE	BY	CH
D	06APR26	SAM	EGO
C	24FEB26	SAM	EGO
B	03FEB26	SAM	PHA
A	12DEC25	SAM	EGO
-	12SEP25	SAM	EGO

CHASSIS DATA
MAKE: PIERCE
MODEL: ENFORCER

Pierce MANUFACTURING INC.

TITLE: 1500GPM, 520G TANK, 500G WATER, 20G FOAM
161" BODY, MUX, VOLTERRA

FOR: CITY OF DECATUR FIRE RESCUE
DECATUR, GEORGIA

DWG NO. 44621AD

JOB NO.	44621
SCALE	1:24
DATE	
DRAWN BY	SAM 16JUL25
CHECKED BY	EGO 18JUL25
SHEET SIZE	D
SHEET NO.	1 OF 1

View File Created 09-APR-2026 07:48:52