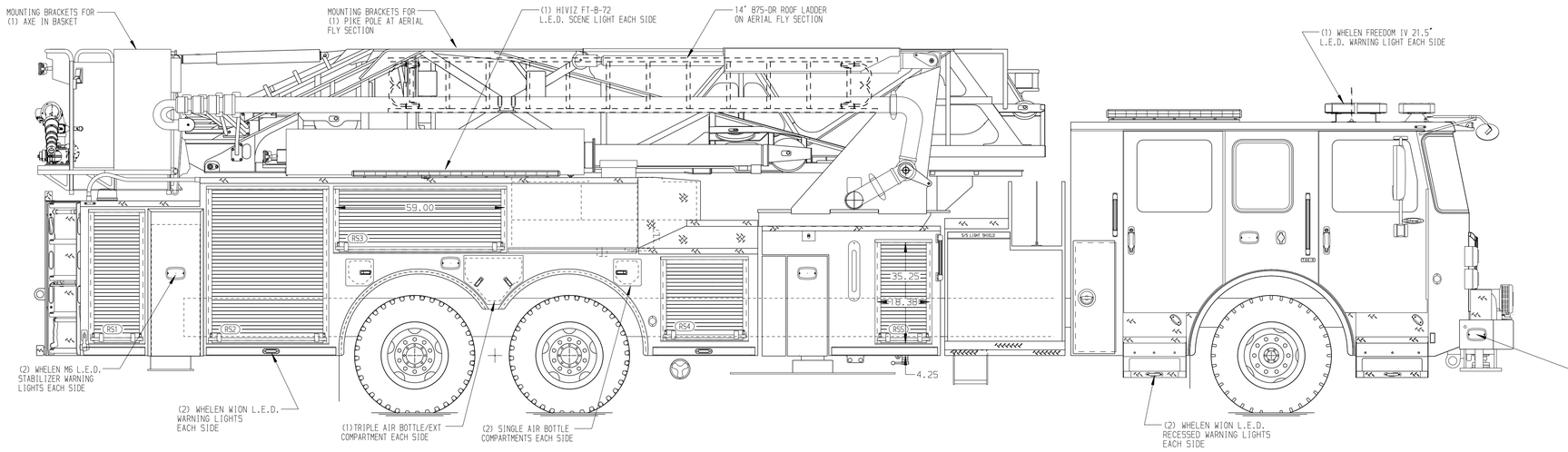

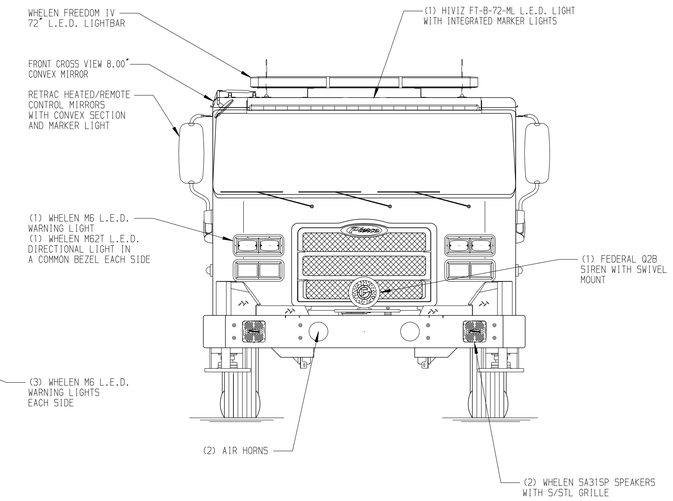

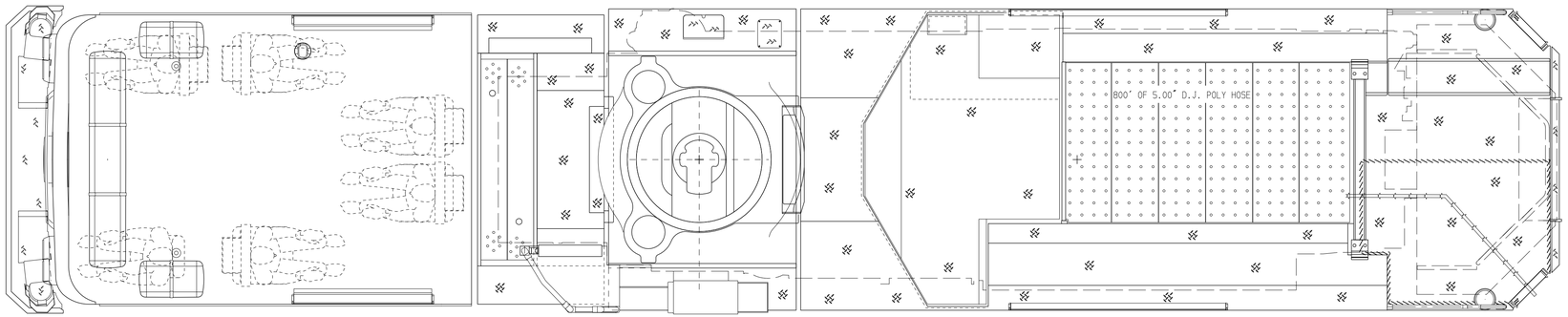

BODY	TOTAL TANK CAPACITY
100' Ascendant Aerial Tower Alum Body	300 Gallon Poly Tank
COMPT,LEFT SIDE	WATER CAPACITY
Full Height & Full Depth Rollup Doors	300 Gallons of Water
COMPT,RIGHT SIDE	FOAM CELL CAPACITY
Full Height Rollup Doors	Foam Cell Not Required
	FOAM SYSTEM
	Foam System Not Required

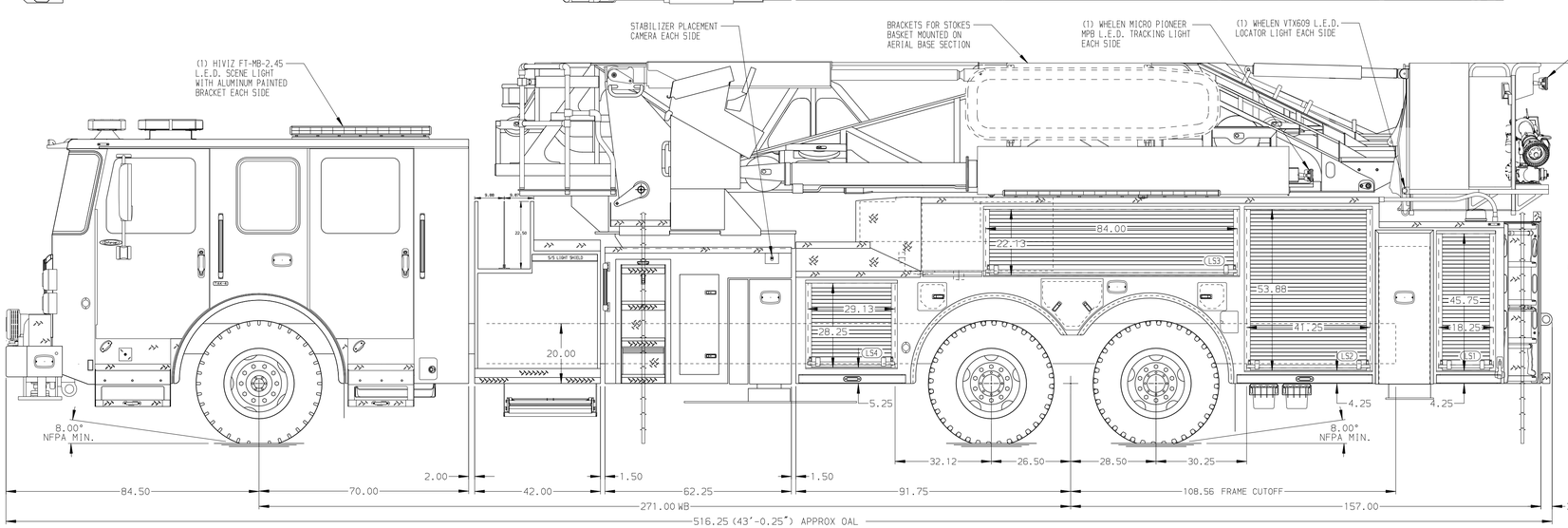

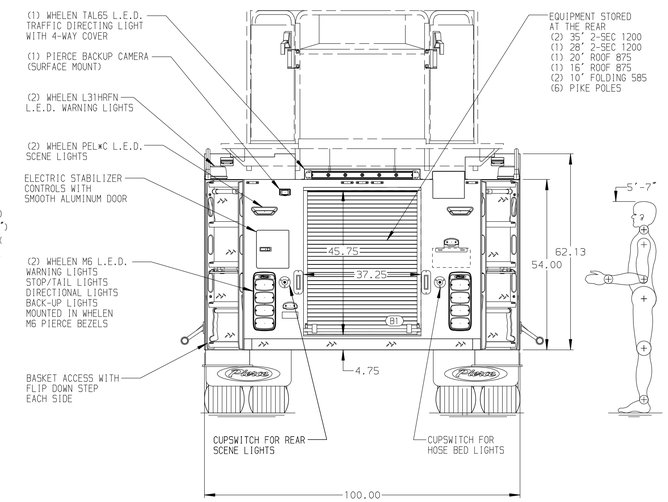

CHASSIS	CAB	ELECTRICAL SYSTEM	AXLE,FRONT,CUSTOM	PUMPHOUSE	CROSSLAYS,1.50"	SPEEDLAYS	SAFETY
Enforcer Chassis	7000 Enforcer Cab	MUX	24,000 Lb TAK-4 Axle	42" Control Zone Side Mount	(2) 1.75" Standard Capacity	Speedlays Not Required	Side Roll and Frontal Impact Protection
ENGINE	BUMPER	TRANSMISSION	AXLE,REAR	PUMP	CROSSLAYS,2.50"	GENERATOR	
510 HP Paccar MX13 Engine	15" Painted Steel	Allison 6th Gen, 4500 EVS P	54,000 Lb Meritor Axle	2000 GPM Waterous ESU1	2.50" Crosslay Not Required	Generator Not Required	

Pierce MANUFACTURING INC.

NOTE

DIMENSIONS SHOWN ARE APPROXIMATE AND ARE SUBJECT TO MINOR DEVIATIONS AS MAY OCCUR OR BE NECESSARY IN CONSTRUCTION.
MINOR DETAILS NOT SHOWN.

1. SHORELINE RECEPTACLE WITH KUSSMAUL SUPER AUTO-EJECT LOCATED REAR OF PASSENGER DOOR
2. AIR INLET WITH DISCONNECT COUPLING RECESSED IN THE DRIVER SIDE STEPWELL
3. BATTERY CHARGER LOCATED PER ORDER
4. BATTERY CHARGE INDICATOR LOCATED ON DRIVER SEAT RISER
5. TECNIQ RUNG LIGHTING AT AERIAL DEVICE
6. SEVEN ADJUSTABLE SHELVES LOCATED IN COMPARTMENTS PER ORDER
7. TWO FLOOR MOUNTED SLIDE-OUT TRAYS LOCATED IN COMPARTMENTS PER ORDER
8. ONE BACK-WALL MOUNTED PEGBOARD LOCATED IN COMPARTMENT PER ORDER
9. TWO RECEPTACLES LOCATED PER ORDER
10. 3-in-1 LYFECOMBO BRACKETS AT AERIAL BASKET
11. TECNIQ 5-SECTION RUNG LIGHTING AT AERIAL DEVICE
12. TWO WHELEN PSL18B L.E.D. LIGHTS UNDER BASKET CORNER STEPS
13. DC POWER TO AERIAL TIP

REV	DATE	BY	CH
2	02DEC25	ANZ	AST
1	14OCT25	ANZ	AST

CHASSIS DATA
MAKE: PIERCE
MODEL: ENFORCER

TITLE: 100' ASCENDANT AERIAL TOWER AND BODY ASSEMBLY
–
FOR: TOWNSHIP OF CLARK
CLARK, NJ

DWG NO.: 44660AD

JOB NO.	44660
SCALE	1:24
DATE	
DRAWN BY	ANZ
	25JUL25
CHECKED BY	JLO
	14AUG25
SHEET SIZE	D
SHEET NO.	1 OF 1

View File Created 11-DEC-2025 07:13:19