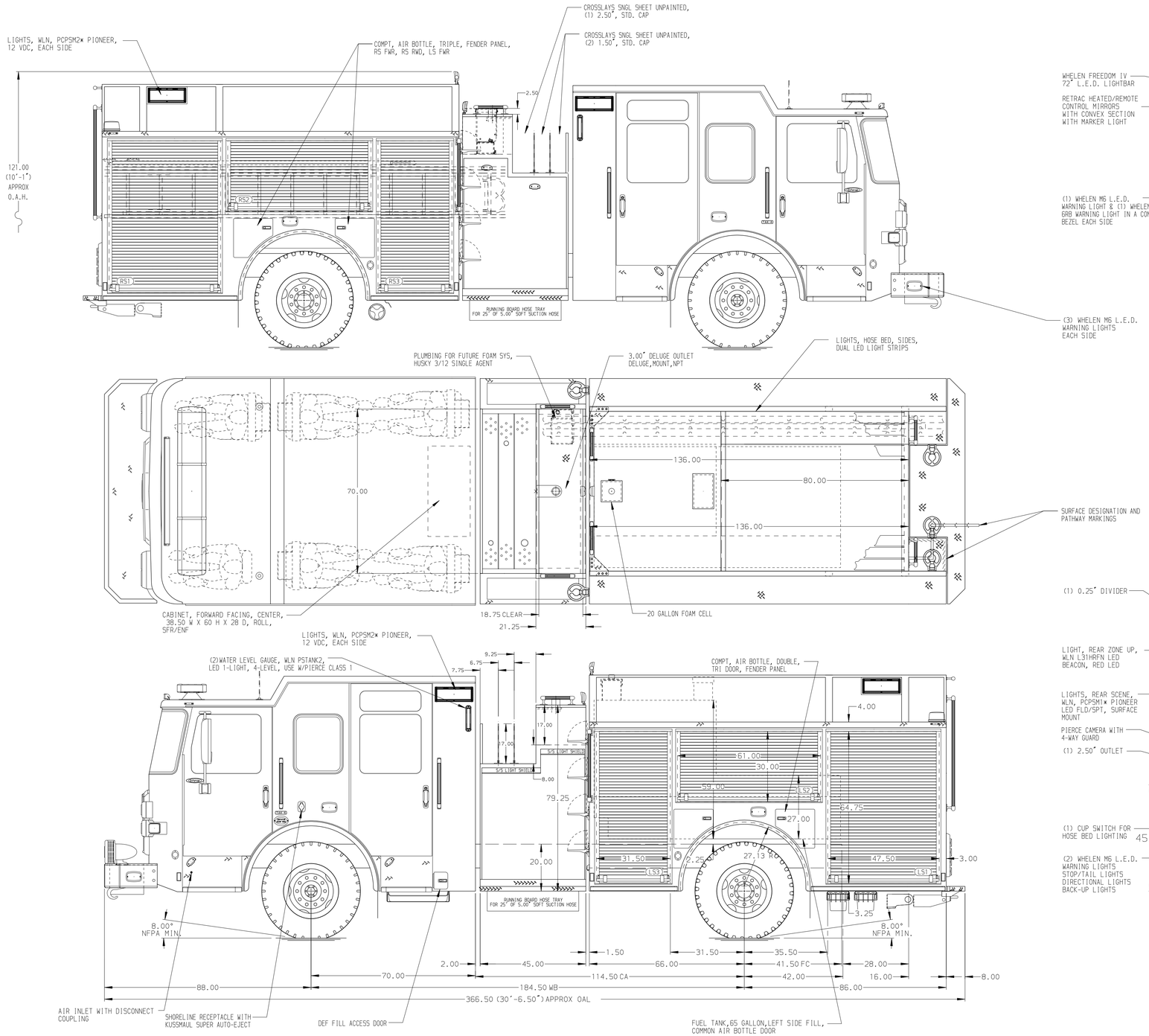

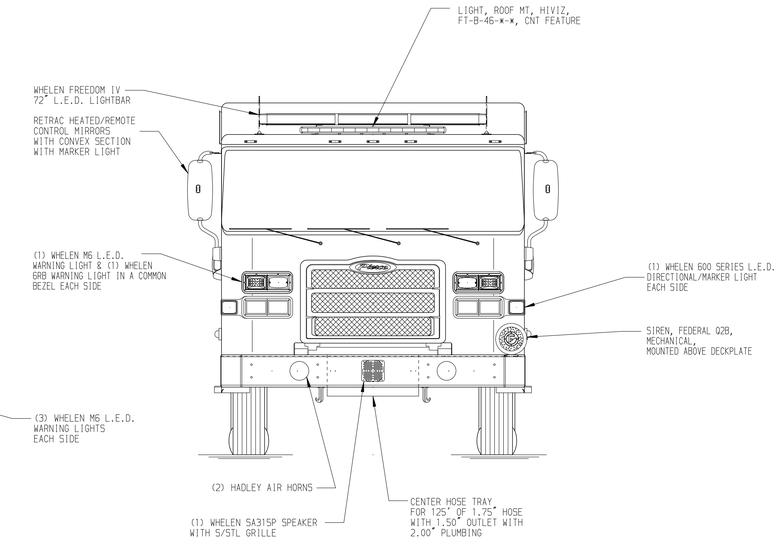

HOSEBED CAPACITIES

1. 1000' OF 5.00" D.J. POLY HOSE
2. 500' OF 2.50" D.J. POLY HOSE
3. EMPTY

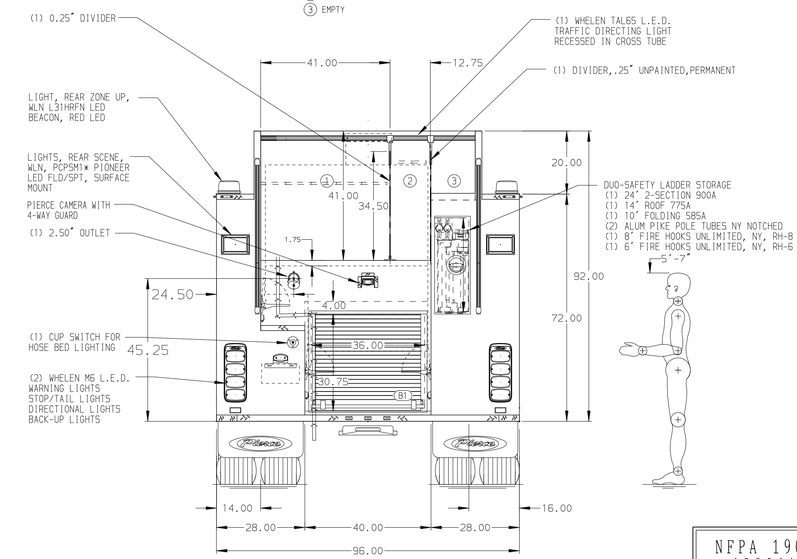

NFPA 1900 (2024) COMPLIANT

ALUMINUM BODY

NOTE

DIMENSIONS SHOWN ARE APPROXIMATE AND ARE SUBJECT TO MINOR DEVIATIONS AS MAY OCCUR OR BE NECESSARY IN CONSTRUCTION.
MINOR DETAILS NOT SHOWN.

REV	DATE	BY	CH
V	26SEP25	RHU	JAP

Pierce MANUFACTURING INC.

CHASSIS DATA	TITLE	1500GPM, 750G TANK, 730G WATER, 20G FOAM 152" PUMPER, HARDWIRED	JOB NO. 44792
MAKE PIERCE	FOR	BARTOW FIRE DEPARTMENT BARTOW,FLORIDA	SCALE 1:24 / DATE
MODEL ENFORCER	DWG NO.	44792AD	DRAWN BY RHU 20JUN25 / CHECKED BY JAP 20JUN25
			SHEET SIZE D / SHEET NO. 1 OF 1

View File Created 29-SEP-2025 08:22:49