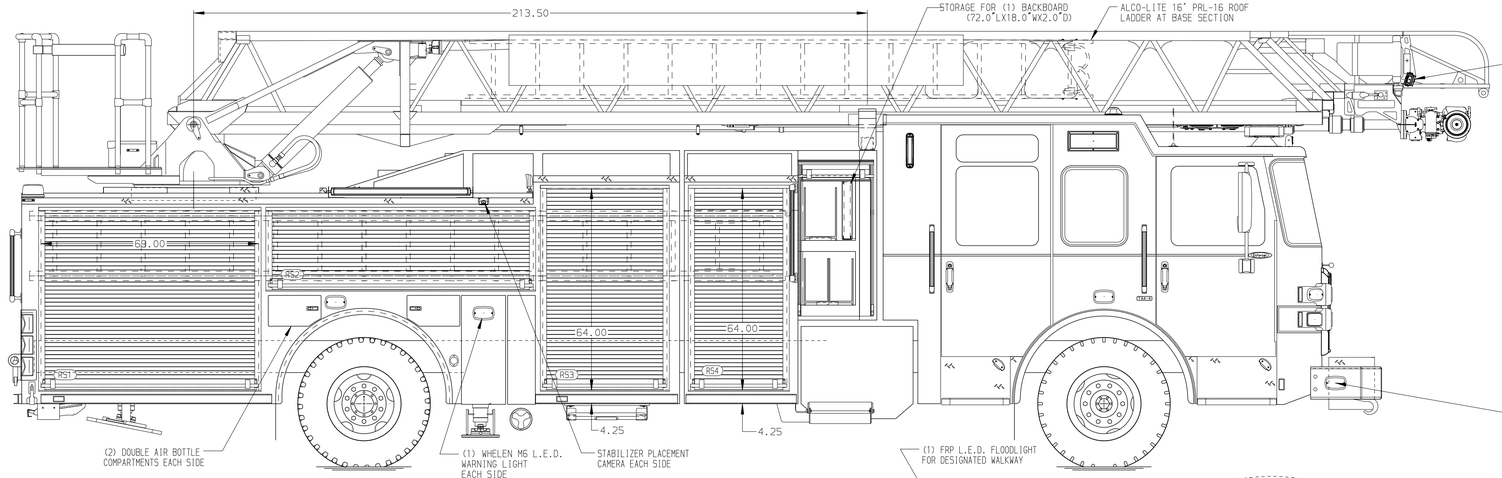

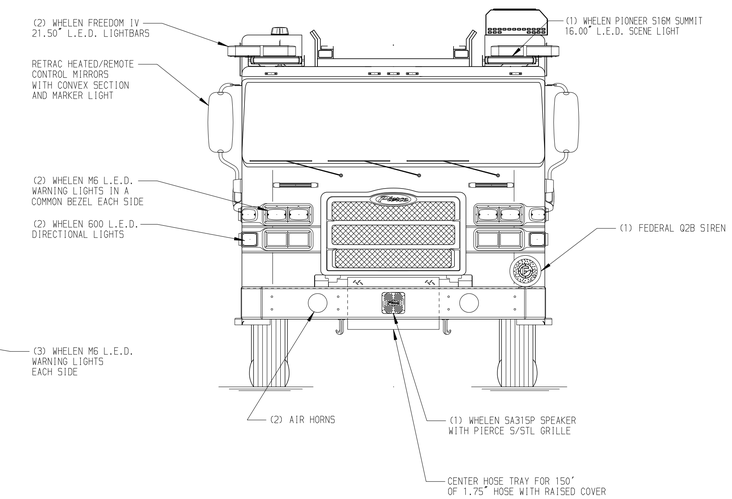

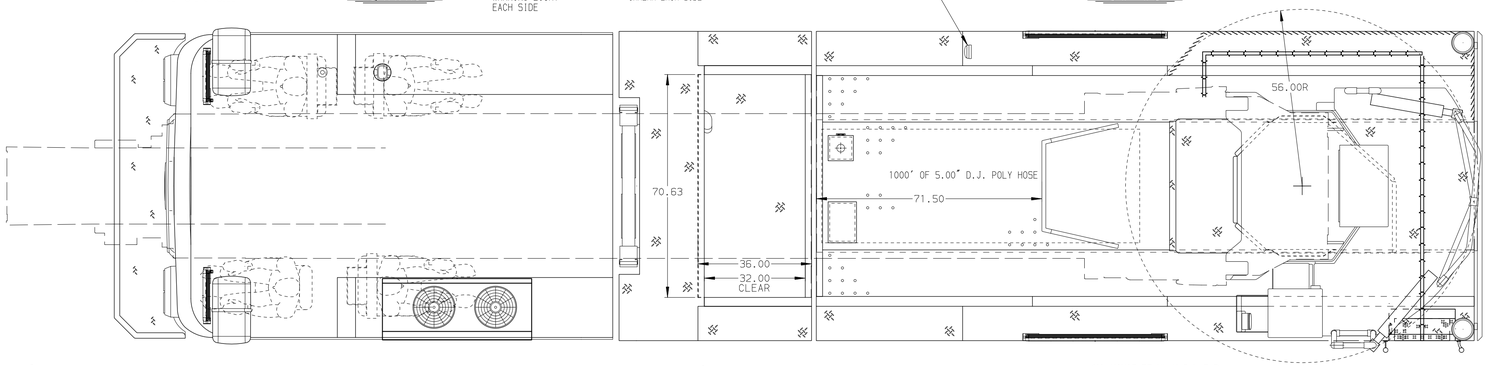

BODY	TOTAL TANK CAPACITY
107' ASL Aluminum Body PUC	520 Gallon Poly Tank
COMPT,LEFT SIDE FRONT	WATER CAPACITY
Full Height Rollup Forward	500 Gallons of Water
COMPT,LEFT SIDE REAR	FOAM CELL CAPACITY
Full Height Rollup Rearward	20 Gallon Foam Cell
COMPT,RIGHT SIDE FRONT	FOAM SYSTEM
Full Height Rollup Forward	Plumbing For Future Husky Foam System
COMPT,RIGHT SIDE REAR	
Full Height Large Compt Rollup Rearward	

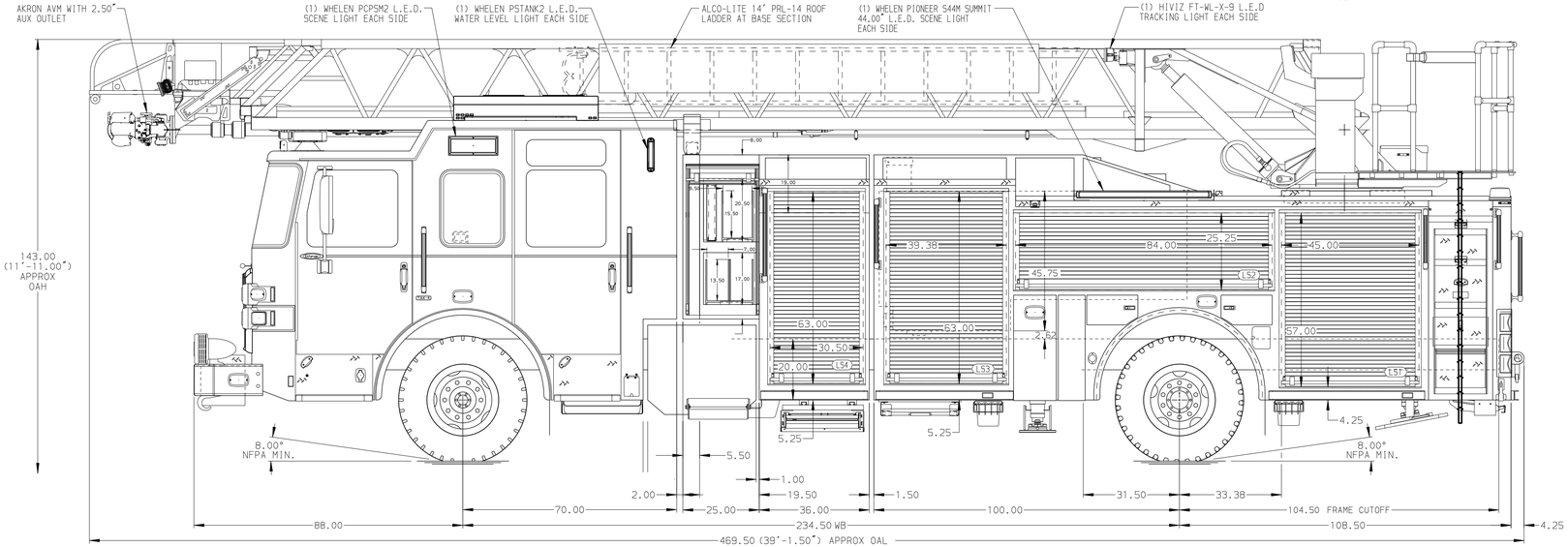

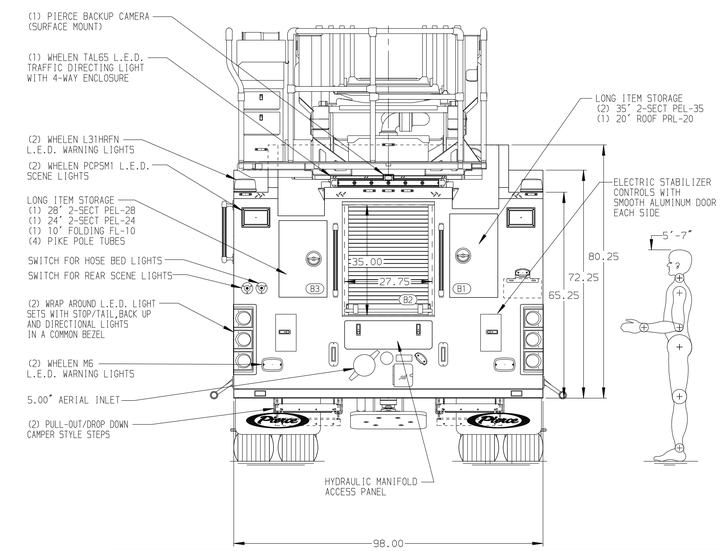

CHASSIS	CAB	ELECTRICAL SYSTEM	AXLE,FRONT,CUSTOM	PUMPHOUSE	CROSSLAYS,1.50"	SPEEDLAYS	SAFETY
Enforcer Chassis, PUC	7010 Notched Enforcer Cab, PUC	MUX	24,000 Lb TAK-4 Axle	Control Zone, PAL/PAP PUC	(2) 1.50", Poly Trays, 200'	Speedlays Not Required	Side Roll and Frontal Impact Protection
ENGINE	BUMPER	TRANSMISSION	AXLE,REAR	PUMP	CROSSLAYS,2.50"	GENERATOR	
510 HP Paccar MX13 Engine	19" Extended Painted Steel	Allison 6th Gen, 4000 EVS P	33,500 Lb Meritor Axle	2000 GPM Pierce PUC	(1) 2.50", Poly Tray, 200'	Generator Not Required	

NOTE

DIMENSIONS SHOWN ARE APPROXIMATE AND ARE SUBJECT TO MINOR DEVIATIONS AS MAY OCCUR OR BE NECESSARY IN CONSTRUCTION.
MINOR DETAILS NOT SHOWN.

1. SHORELINE RECEPTACLE WITH KUSSMAUL SUPER AUTO-EJECT LOCATED IN DRIVER SIDE STEPWELL
2. AIR INLET WITH DISCONNECT COUPLING IN DRIVER SIDE STEPWELL
3. AIR OUTLET WITH SHUT OFF VALVE LOCATED LOCATED ON OFFICER SIDE PUMP PANEL
4. BATTERY CHARGE INDICATOR LOCATED PER ORDER
5. BATTERY CHARGER LOCATED PER ORDER
6. DUAL LIGHT STRIPS IN COMPARTMENTS PER ORDER
7. NINE ADJUSTABLE SHELVES LOCATED IN COMPARTMENTS PER ORDER
8. FIVE FLOOR MOUNTED SLIDE-OUT TRAYS LOCATED IN COMPARMENTS PER ORDER
9. ONE SWING-OUT GEAR GRID TOOL GRID SYSTEM LOCATED PER ORDER
10. TWO BACK WALL MOUNTED PEGBOARDS IN COMPARTMENTS PER ORDER
11. ONE SLIDE-OUT OIL DRY HOPPER LOCATED IN COMPARTMENT PER ORDER
12. ONE OIL DRY HOPPER LOCATED IN COMPARTMENT PER ORDER
13. TWO 120V RECEPTACLE LOCATED PER ORDER
14. MODEL 6047 WIRELESS MONITIOR REMOTE CONTROL
15. TECNIQ FOUR SECTION RUNG LIGHTING AT AERIAL DEVICE
16. NO LIMITED RETRACTION REQUIRED
17. 1500 GPM HIGH FLOW WATERWAY
18. ONE 1.50 OUTLET WITH 2.00 PIPING AND SWIVEL LOCATED IN CENTER BUMPER TRAY

REV	DATE	BY	CH
0	09DEC25	ZMI	AST

CHASSIS DATA
MAKE: PIERCE
MODEL: ENFORCER

Pierce MANUFACTURING INC.

TITLE: 107' ASCENDANT AERIAL LADDER AND BODY ASSEMBLY
-
FOR: LIVONIA FIRE AND RESCUE
LIVONIA, MI

DWG NO.: 44935AD

JOB NO.	44935
SCALE	1:24
DATE	
DRAWN BY	ZMI
DATE	07OCT25
CHECKED BY	AST
DATE	24OCT25
SHEET SIZE	D
SHEET NO.	1 OF 1

View File Created 12-DEC-2025 11:35:14