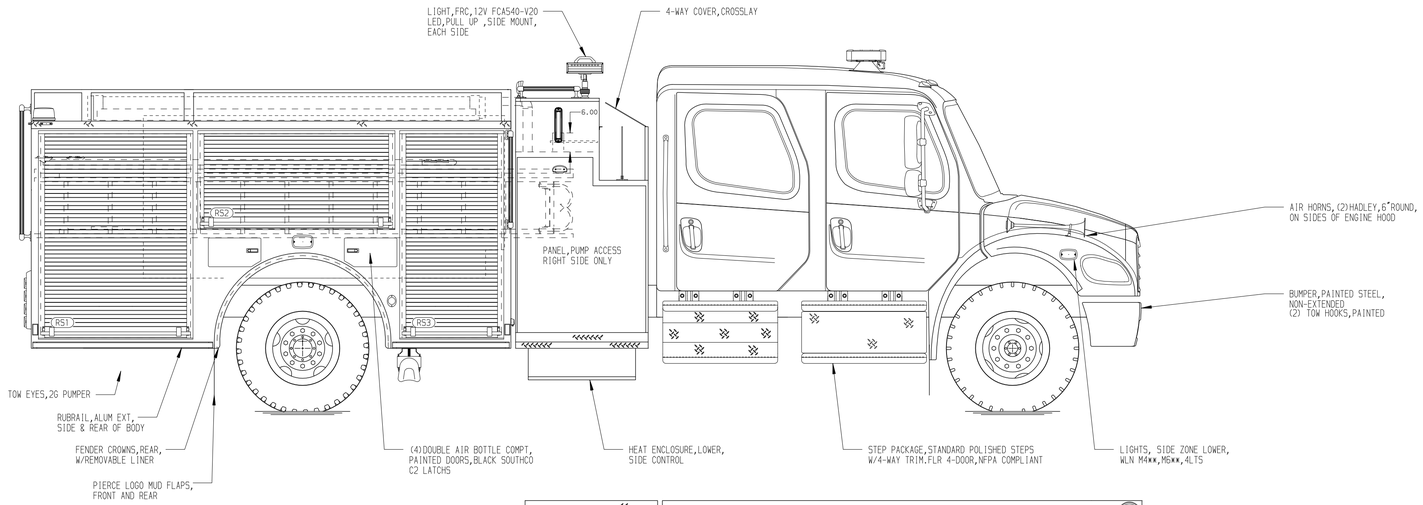

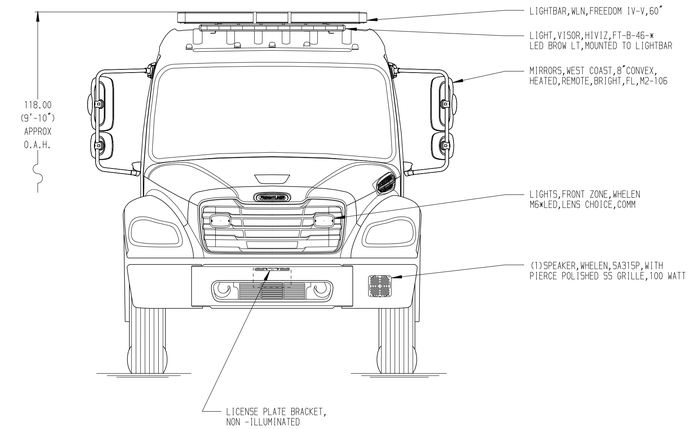

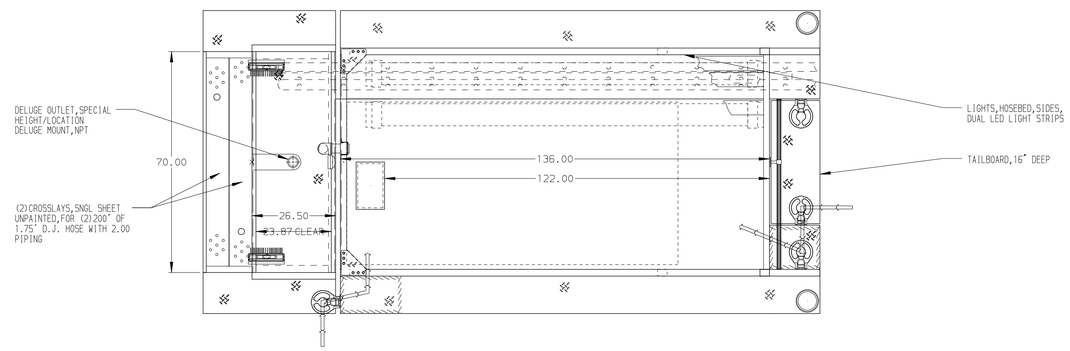

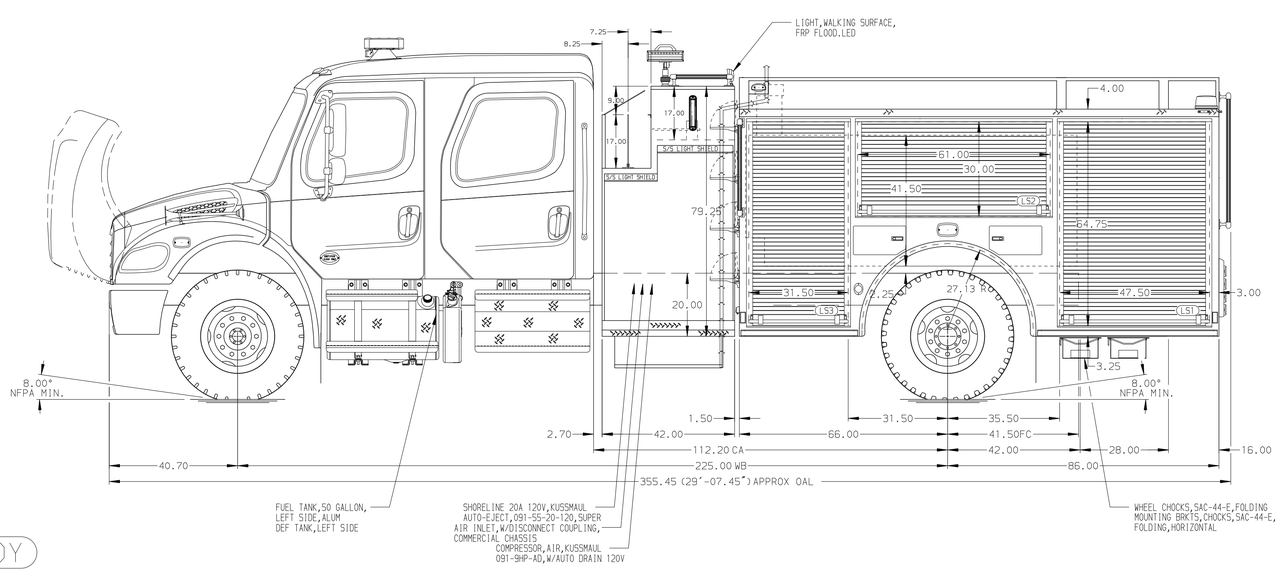

ALUMINUM BODY

HOSEBED CAPACITIES

1. 600' OF 4.00" D.J. POLY HOSE
2. 400' OF 2.50" D.J. POLY HOSE
3. 300' OF 2.50" D.J. POLY HOSE PRECONNECT

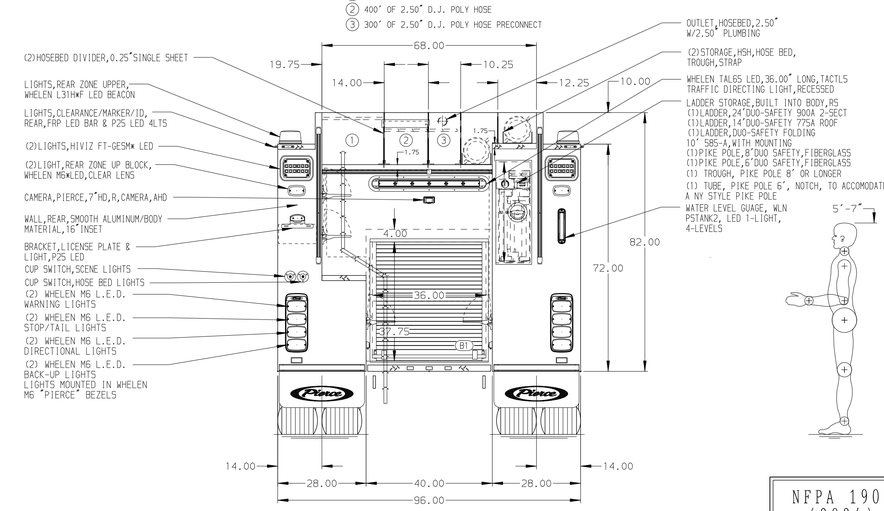

NFPA 1900 (2024) COMPLIANT

NOTE

DIMENSIONS SHOWN ARE APPROXIMATE AND ARE SUBJECT TO MINOR DEVIATIONS AS MAY OCCUR OR BE NECESSARY IN CONSTRUCTION.
MINOR DETAILS NOT SHOWN.

REV	DATE	BY	CH
7	19DEC25	TYB	MAR
6	14OCT25	TYB	MAR
5	21AUG25	ADP	RWI

CHASSIS DATA: MAKE FL; MODEL M2-106 PLUS

Pierce MANUFACTURING INC.

TITLE: 1250-D-750P,750G WATER,NO FOAM,152" PUMPER BODY 42"SIDE CONTROL,(2)1.50" STD. CROSSLAYS

FOR: TOWNSHIP OF RIDEAU LAKES DELTA,ONTARIO

DWG NO.: 44977AD

JOB NO.	44977
SCALE 1:24	DATE
DRAWN BY ADP	07AUG25
CHECKED BY AJA	8AUG25
SHEET SIZE D	SHEET NO. 1 OF 1

View File Created 19-DEC-2025 11:38:24