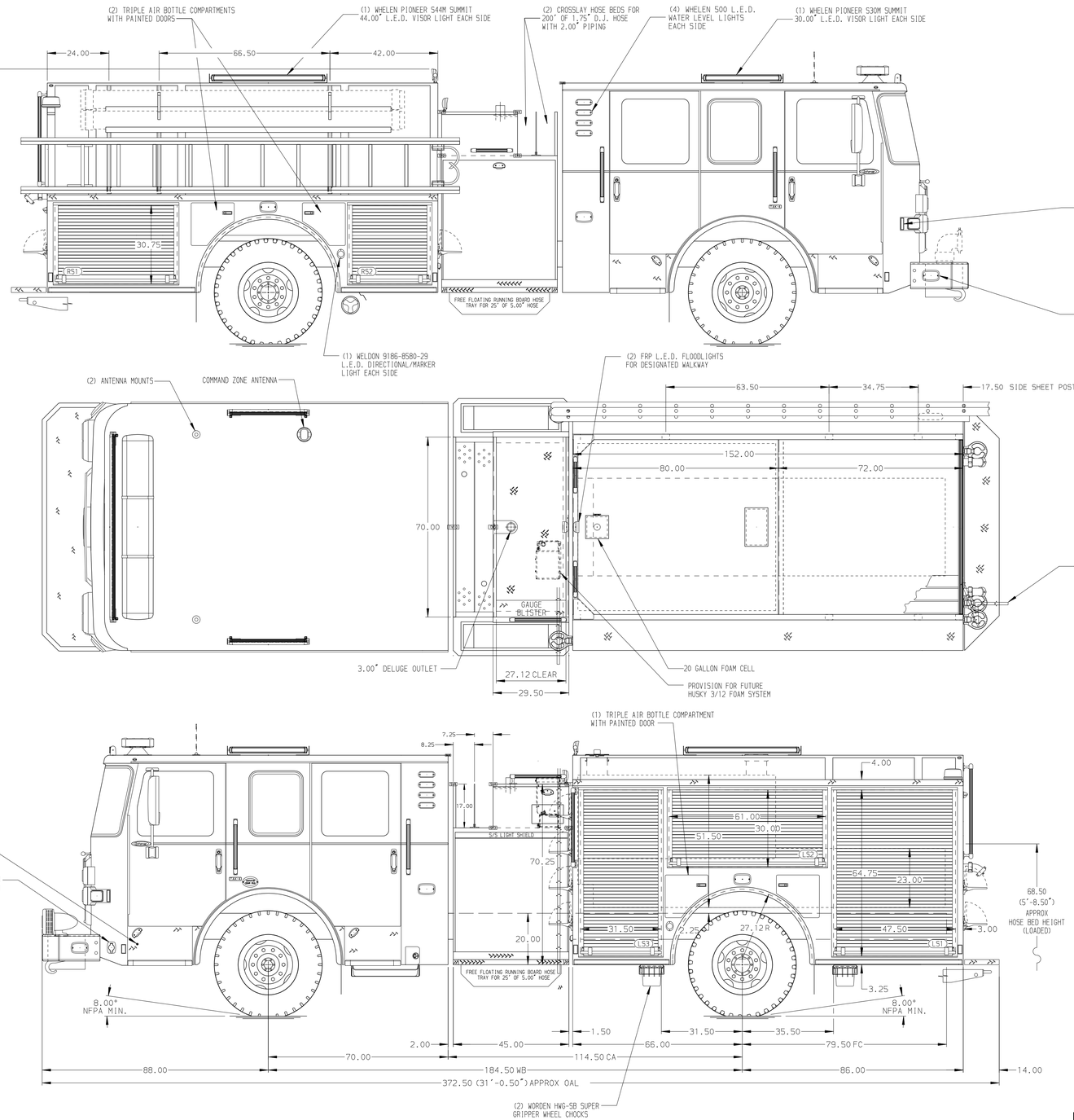

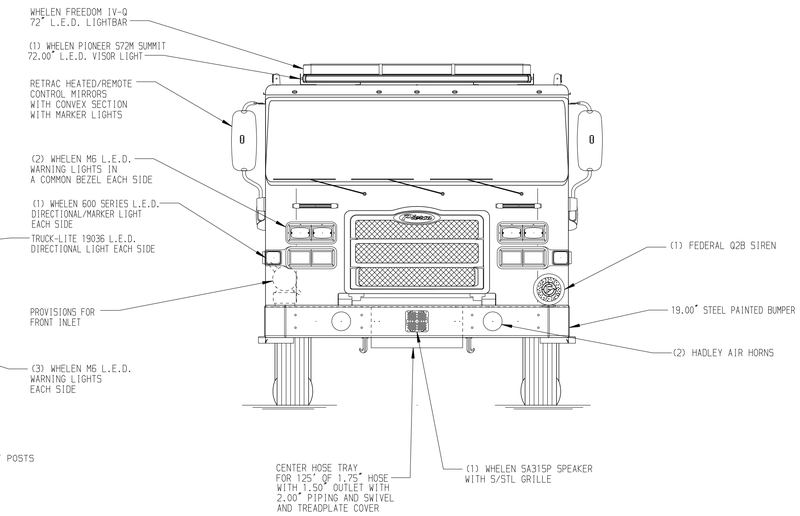

HOSEBED CAPACITIES

1. 400' OF 1.75" D.J. POLY HOSE
2. 200' OF 2.50" D.J. POLY HOSE
3. 1000' OF 5.00" D.J. POLY HOSE
4. 200' OF 2.50" D.J. POLY HOSE
5. 250' OF 1.75" D.J. POLY HOSE

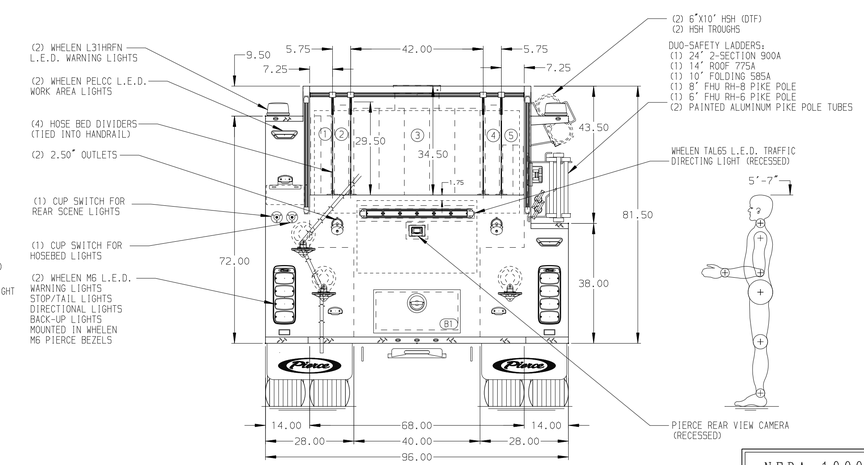

NFPA 1900 (2024) COMPLIANT

ALUMINUM BODY

CUSTOMER APPROVAL

APPROVED BY: _____

DATE: _____

Pierce MANUFACTURING INC.

NOTE

DIMENSIONS SHOWN ARE APPROXIMATE AND ARE SUBJECT TO MINOR DEVIATIONS AS MAY OCCUR OR BE NECESSARY IN CONSTRUCTION.
MINOR DETAILS NOT SHOWN.

1. BATTERY CHARGER LOCATED BEHIND DRIVER'S SEAT
2. BATTERY CHARGE INDICATOR LOCATED ON THE DRIVER SIDE SEAT RISER
3. (1) 15/20A 120V RECEPTACLE LOCATED PER ORDER

REV	DATE	BY	CH
V	12FEB26	DLH	WME

CHASSIS DATA — MAKE: PIERCE — MODEL: ENFORCER

TITLE: 1500GPM, 1020G TANK, 1000G WATER, 20G FOAM 152" 2G PUMPER, MUX

FOR: PIERCE STOCK UNIT APPLETON, WI

DWG NO.: 45331AD

JOB NO.	45331
SCALE	1:24
DATE	
DRAWN BY	MMF 19DEC25
CHECKED BY	AST 19DEC25
SHEET SIZE	D
SHEET NO.	1 OF 1

View File Created 12-FEB-2026 12:16:04