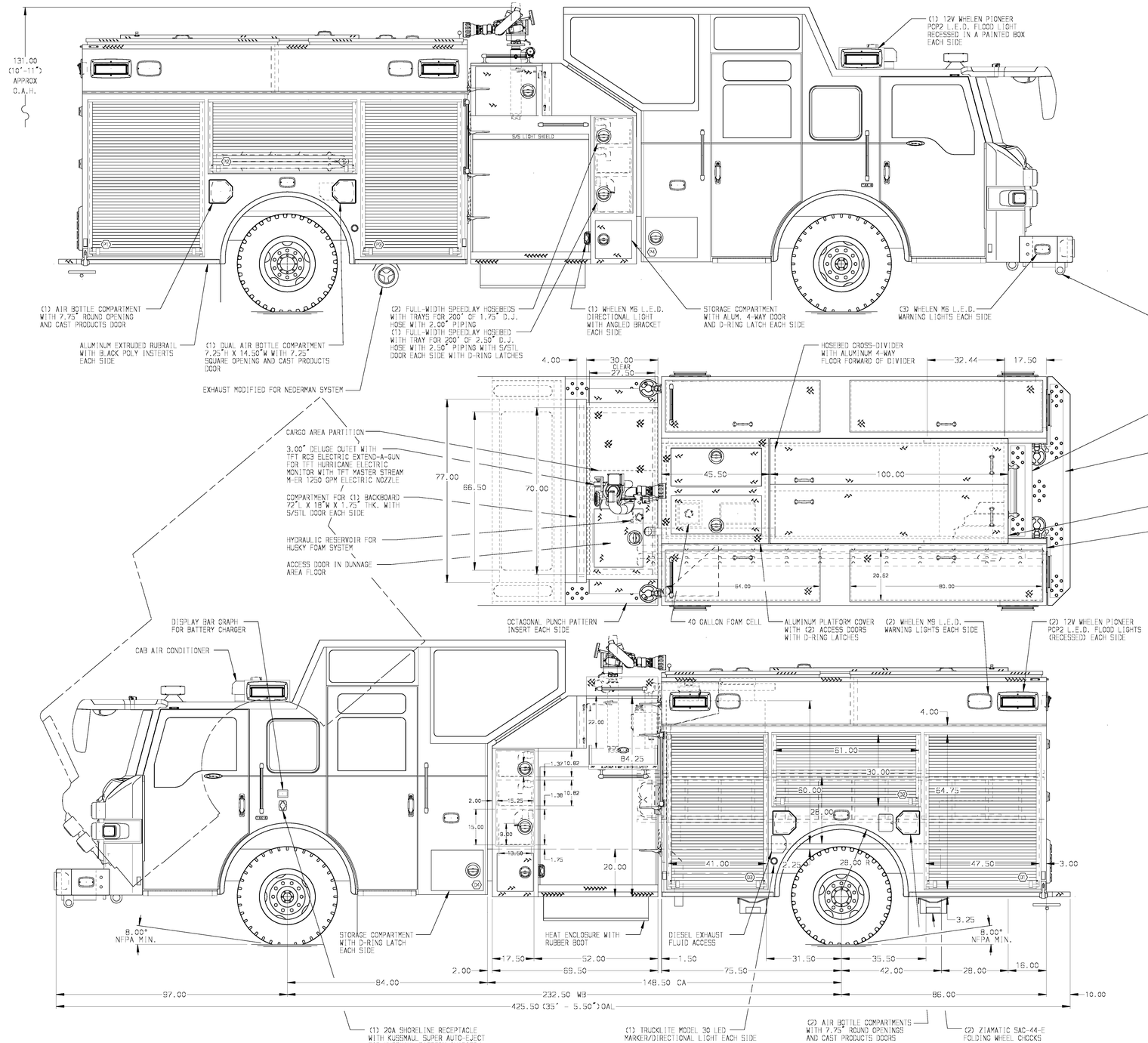

ALUMINUM BODY

SIDE ROLL & FRONTAL IMPACT PROTECTION

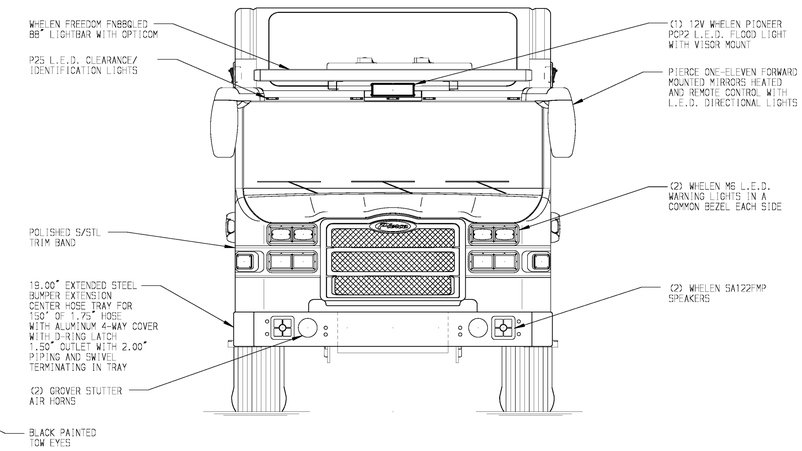

HOSEBED CAPACITIES
1. 200' OF 2.50" D.J. HOSE
2. 1000' OF 5.00" D.J. HOSE
3. 400' OF 2.50" D.J. HOSE

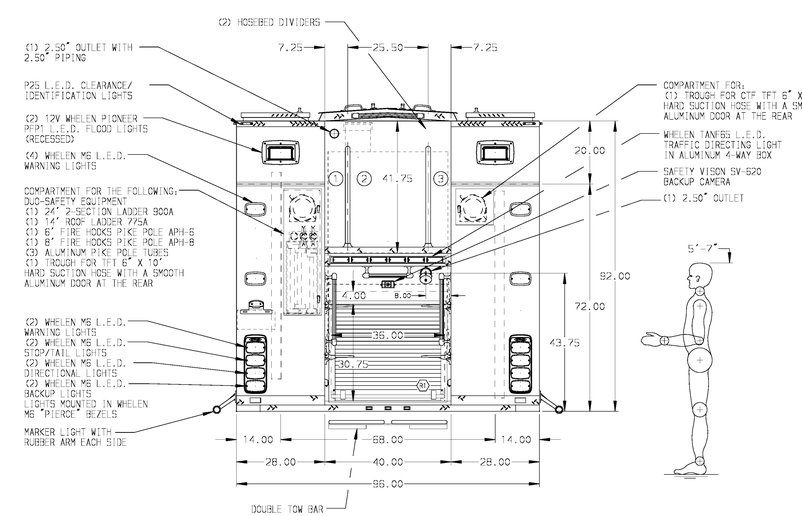

NOTE
DIMENSIONS SHOWN ARE APPROXIMATE AND ARE SUBJECT TO MINOR DEVIATIONS AS MAY OCCUR OR BE NECESSARY IN CONSTRUCTION.
MINOR DETAILS NOT SHOWN.

1. MOUNTING BASES FOR ANTENNAS LOCATED PER SHOP ORDER
2. KUSSMAUL PUMP PLUS 1200 BATTERY CHARGER/AIR COMPRESSOR LOCATED BEHIND DRIVER'S SEAT
3. PUMP COMPARTMENT HEATER ON PASSENGER SIDE
4. S/STL PROTECTIVE GUARDS FOR ALL ROLL-UP DOORS
5. AIR INLET W/DISCONNECT COUPLING LOCATED IN DRIVER SIDE STEP WELL
6. AMDOR LUMABAR L.E.D. H2O LIGHTS BELOW HOSEBED COVER
7. ONSPOT AUTOMATIC TIRE CHAINS
8. STAINLESS STEEL FENDER CROWNS FRONT AND REAR
9. PIERCE LOGO MUDFLAPS FRONT AND REAR
10. S/STL SCUFFPLATES ON REAR EDGES OF CAB AND FRONT EDGES OF BODY
11. ONE FLOOR MOUNTED SLIDE-OUT TRAY IN COMPARTMENTS D1, D3, P1 & R1
12. ONE ADJUSTABLE SLIDE-OUT/TILT-DOWN TRAY WITH CABLE RELEASE IN COMPARTMENT P2
13. MOUNTING FOR LITTLE GIANT MODEL 17 LADDER WITH L-SHAPED BRACKETS IN COMPARTMENT P2
14. ONE ADJUSTABLE SHELF (FULL DEPTH/FULL WIDTH) IN COMPARTMENTS D3
15. ADJUSTABLE SHELF TRACKS LOCATED IN COMPARTMENTS D3, P1 & P2
16. 100# OIL DRY HOPPER LOCATED IN HATCH COMPARTMENT ABOVE D3
17. HUSKY 12 SINGLE AGENT FOAM SYSTEM
18. DUAL AMDOR L.E.D. LIGHT STRIPS IN EACH BODY COMPARTMENT
19. PERIMETER SCENE LIGHTS LOCATED PER SHOP ORDER
20. BLACK LINE-X COATING ON TOP FLANGE OF FRONT BUMPER
21. PAINTED ALUMINUM PEGBOARD WITH TRACK LOCATED ON TANK WALL OF COMPARTMENT D1, D2, D3, P1 & P3
22. AMDOR LUMABAR L.E.D. LIGHTS UNDER HATCH COMPT. DOORS
23. ELECTRIC CAB DOOR LOCKS
24. ONE 15A, 120V DUPLEX RECEPTACLE LOCATED IN COMPARTMENT P2
25. TWO SLIDE-OUT ALUMINUM TOOLBOARDS IN COMPARTMENT P3
26. STORAGE BRACKET FOR TRAFFIC CONES ON PASSENGER SIDE OF THE REAR BUMPER
27. PEGBOARD ON SIDE WALL OF COMPARTMENT D1
28. ENCLOSURE LONG TOOL STORAGE TRANSVERSE IN REAR COMPARTMENT
29. 10' FOLDING LADDER IN DRIVERS SIDE HATCH COMPARTMENT

REV	DATE	BY	CH
1	20MAY15	AMI	SHE
2	28MAR15	AMI	CDU

CHASSIS DATA
MAKE: PIERCE
MODEL: VELOCITY

Pierce MANUFACTURING INC.

TITLE: 2000-D-600P W/40 GAL FOAM CELL, 161" RESCUE BODY (3) SPEEDLAYS, LADDERS THRU BODY, DELUGE
FOR: AIRDRIE FIRE DEPARTMENT, AIRDRIE, ALBERTA, CANADA
DWG NO.: 28730AD

JOB NO.	28730
SCALE 1:24	DATE
DRAWN BY AMI	12MAR15
CHECKED BY CDU	12MAR15
SHEET SIZE D	SHEET NO. 1 OF 1

View File Created 22-MAY-2015 14:00:45