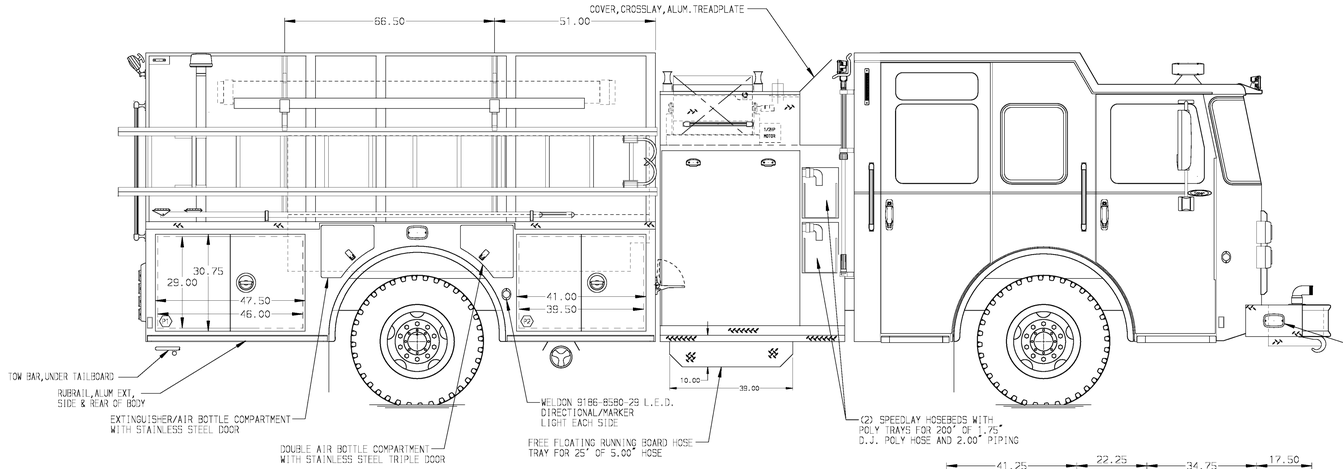

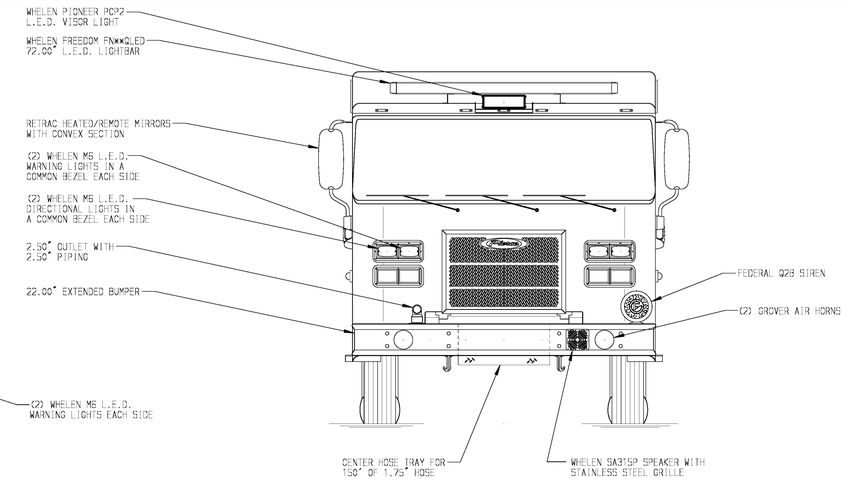

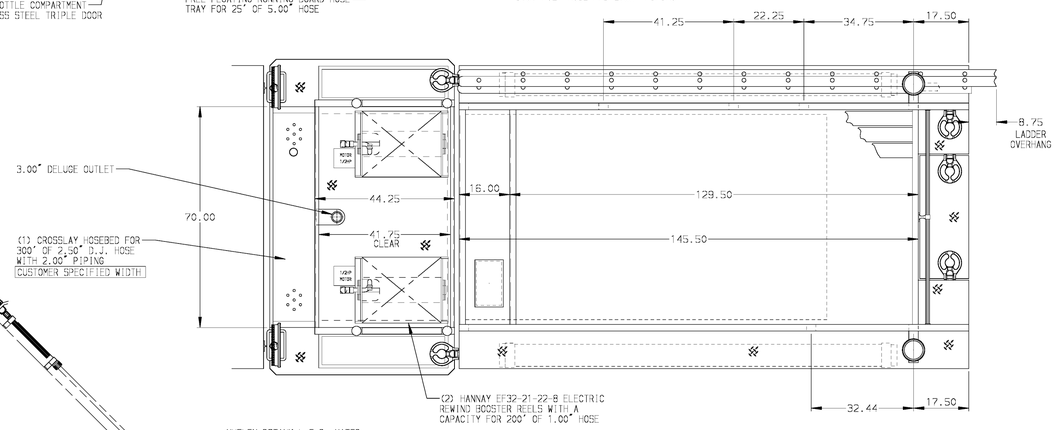

HOSEBED CAPACITIES

1. 500' OF 3.00" D.J. POLY HOSE
2. 500' OF 3.00" D.J. POLY HOSE
3. 1000' OF 5.00" D.J. POLY HOSE

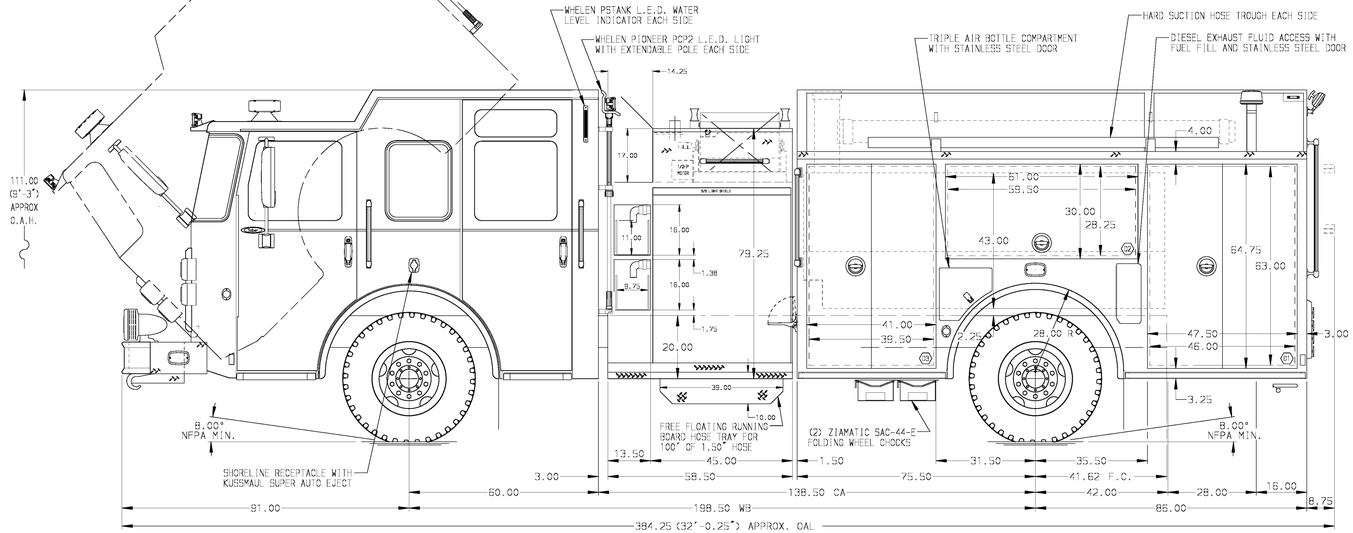

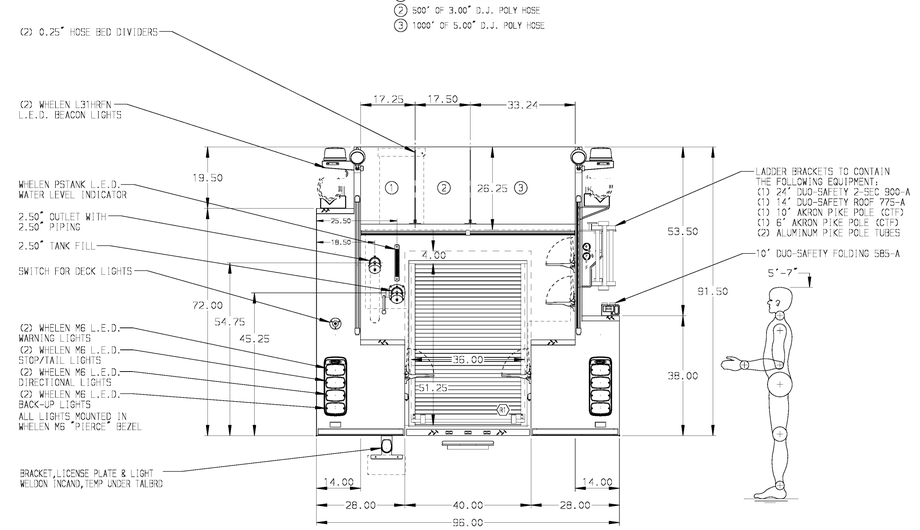

ALUMINUM BODY

NOTE

DIMENSIONS SHOWN ARE APPROXIMATE AND ARE SUBJECT TO MINOR DEVIATIONS AS MAY OCCUR OR BE NECESSARY IN CONSTRUCTION.
MINOR DETAILS NOT SHOWN.

REV	DATE	BY	CH
V	22DEC15	JLA	GSC
V	20NOV15	JLA	GSC

CHASSIS DATA
MAKE: PIERCE
MODEL: SABER FR

Pierce MANUFACTURING INC.

		JOB NO.	29534
		SCALE 1:24	DATE
TITLE	1500-D-1000P; 161" PUMPER BODY P.S. LOW; DELUGE LADDERS ABOVE P.S. COMPARTMENTS; (2) BOOSTER REELS	DRAWN BY BST	25SEP15
FOR	ANDERSON COUNTY FIRE SERVICE ANDERSON, SC	CHECKED BY KBO	25SEP15
DWG NO.	29534AD	SHEET SIZE D	SHEET NO. 1 OF 1

View File Created 04-JAN-2016 12:19:57