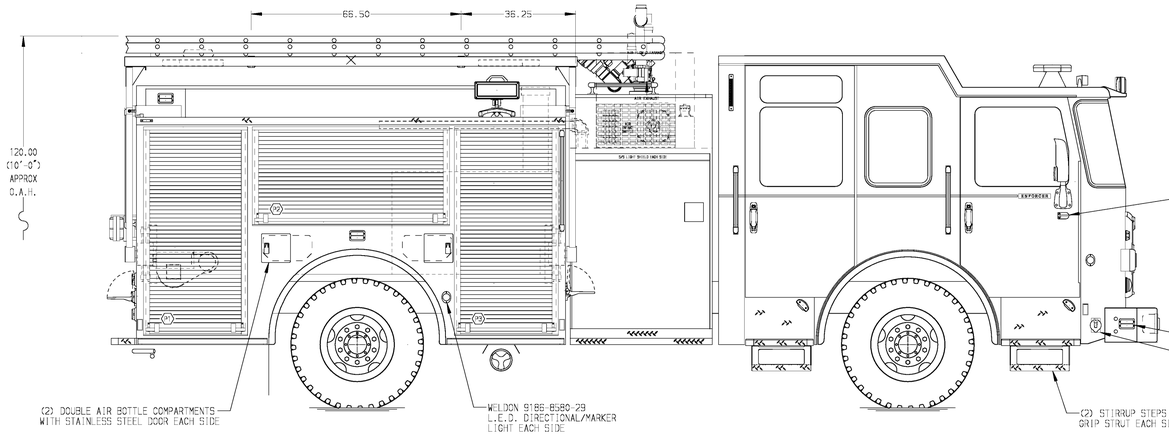

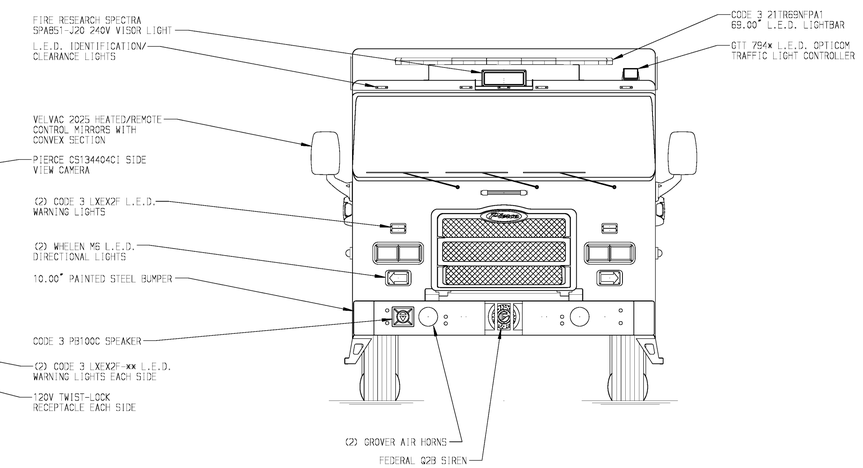

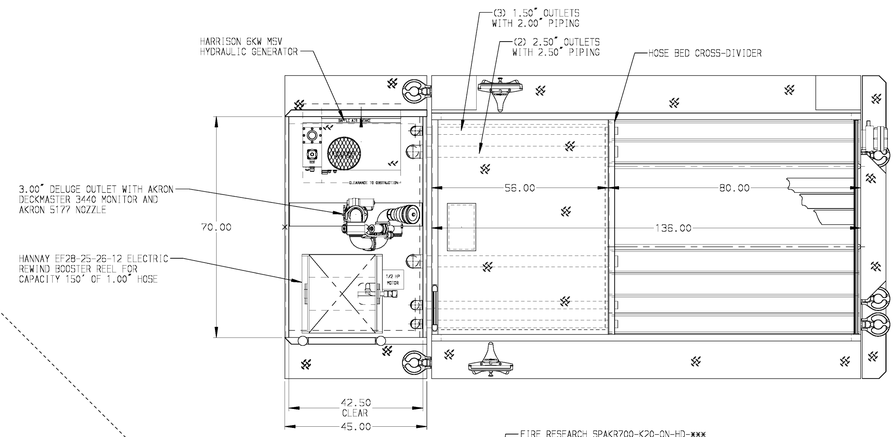

HOSEBED CAPACITIES

1. 200' OF 1.75" D.J. POLY HOSE
2. 200' OF 1.75" D.J. POLY HOSE
3. 200' OF 2.50" D.J. POLY HOSE
4. 200' OF 2.50" D.J. POLY HOSE
5. 600' OF 5.00" D.J. POLY HOSE
6. 200' OF 2.50" D.J. POLY HOSE
7. 200' OF 1.75" D.J. POLY HOSE

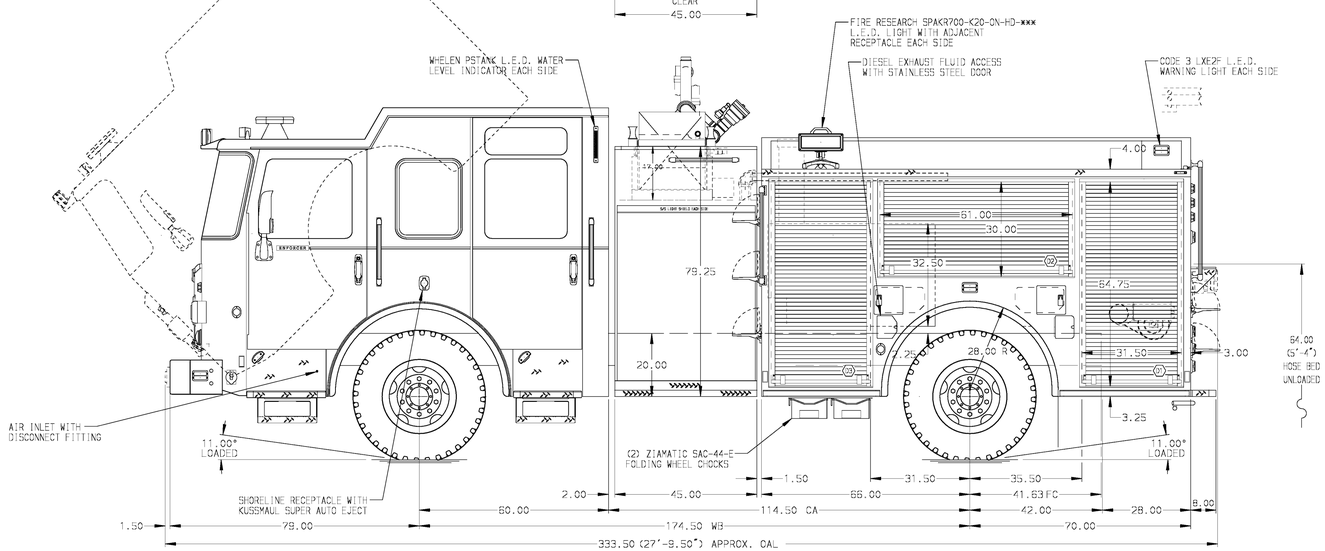

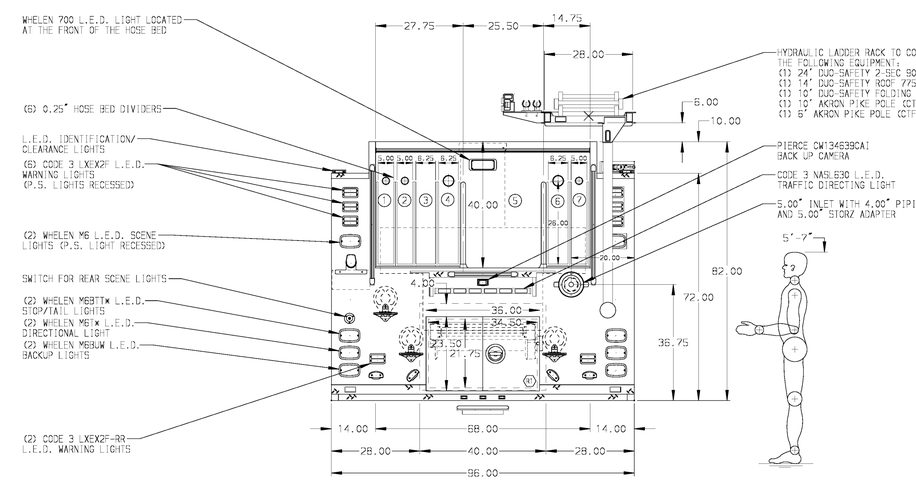

ALUMINUM BODY | MAXIMUM O.A.L. 336.00" | FRONTAL IMPACT PROTECTION

NOTE

DIMENSIONS SHOWN ARE APPROXIMATE AND ARE SUBJECT TO MINOR DEVIATIONS AS MAY OCCUR OR BE NECESSARY IN CONSTRUCTION.
MINOR DETAILS NOT SHOWN.

1. INSTA-CHAIN AUTOMATIC TIRE CHAINS TO BE PROVIDED AT REAR
2. AIR OUTLET WITH SHUT OFF VALVE LOCATED ON DRIVER SIDE PUMP PANEL
3. BATTERY CHARGER INDICATOR LOCATED ON DRIVER SIDE SEAT RISER
4. VOGEL LUBE SYSTEM PUMP LOCATED PER SHOP ORDER
5. STAINLESS STEEL SCUFFPLATE ON EACH CAB DOOR JAMB
6. MOUNTING BASE FOR ANTENNA LOCATED PER SHOP ORDER
7. PERIMETER SCENE LIGHTS LOCATED PER SHOP ORDER
8. SHELF TRACKS LOCATED IN ALL SPECIFIED BODY COMPARTMENTS
9. 500 LB. FULL WIDTH/DEPTH ADJUSTABLE SHELVES WITH 2" SIDES IN COMPARTMENT-ONE IN D2; TWO IN P1,P3; THREE IN D1,D3
10. MIC AND SPEAKER COMPARTMENT LOCATED ON DRIVER SIDE PUMP PANEL
11. AMDOR L.E.D. COMPARTMENT LIGHTS LOCATED IN ALL SPECIFIED BODY COMPARTMENTS
12. CIRCUIT BREAKER PANEL LOCATED IN COMPARTMENT-D3
13. ONE AKRON BRMC-10-28 ELECTRIC REWIND CORD REEL WITH 150' OF 10/3 CABLE IN COMPARTMENT-R1

REV	DATE	BY	CH
V	14SEP15	BST	PJP
V	21AUG15	BST	PJP
V	01JUL15	CDU	CHR
V	25JUN15	BST	CDU

CHASSIS DATA
MAKE: PIERCE
MODEL: ENFORCER

Pierce MANUFACTURING INC.

TITLE: 1000-D-300P; 136" PUMPER BODY; DELUGE; GENERATOR BOOSTER REEL; HYDRAULIC LADDER RACK

FOR: CITY OF BOULDER
BOULDER, CO

DWG NO. 29045AD

JOB NO.	29045
SCALE	1:24
DATE	
DRAWN BY	BST 11JUN15
CHECKED BY	CDU 12JUN15
SHEET SIZE	D
SHEET NO.	1 OF 1

View File Created 14-SEP-2015 15:15:02