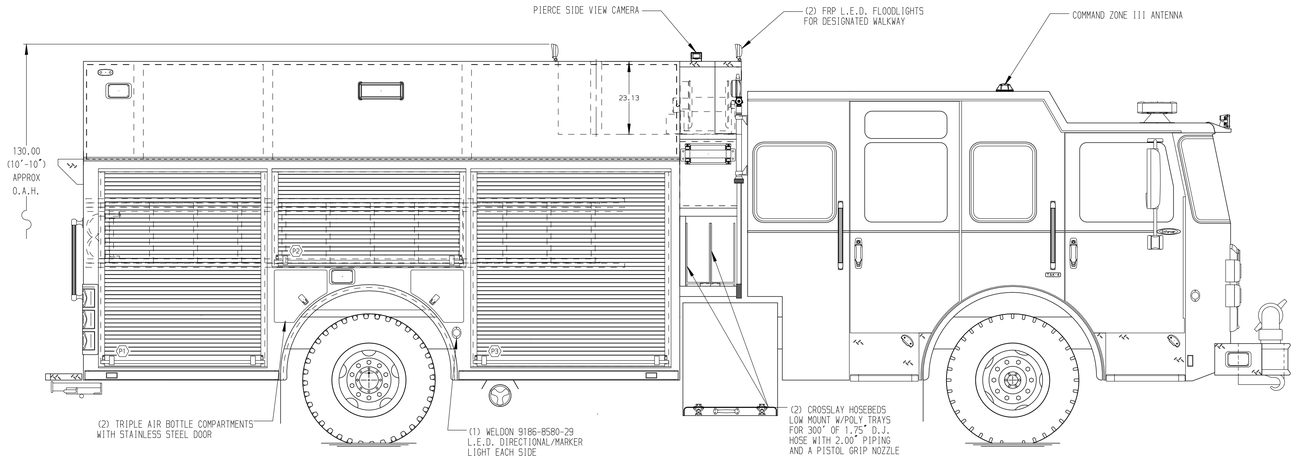

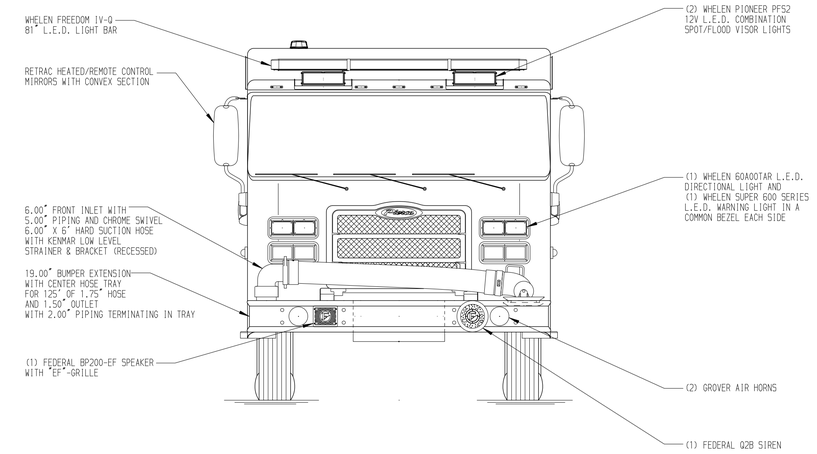

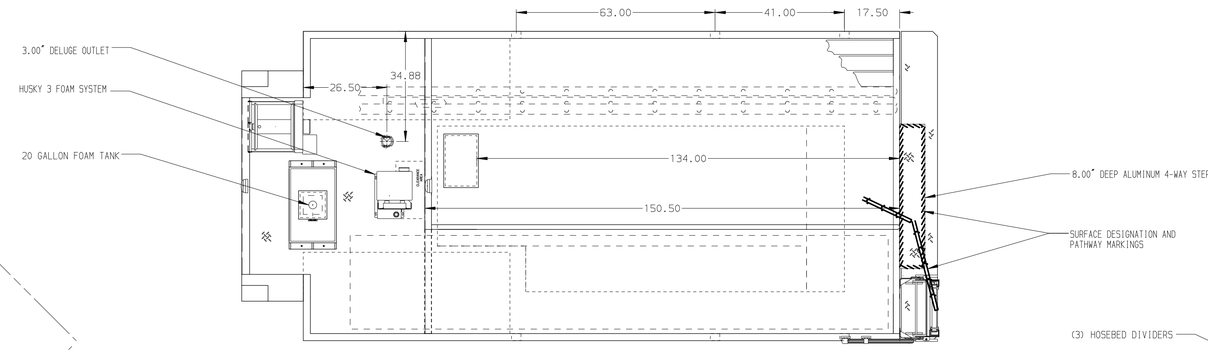

HOSEBED CAPACITIES

1. 200' OF 2.50" D.J. POLY HOSE
2. 200' OF 2.50" D.J. POLY HOSE
3. 1000' OF 5.00" D.J. POLY HOSE

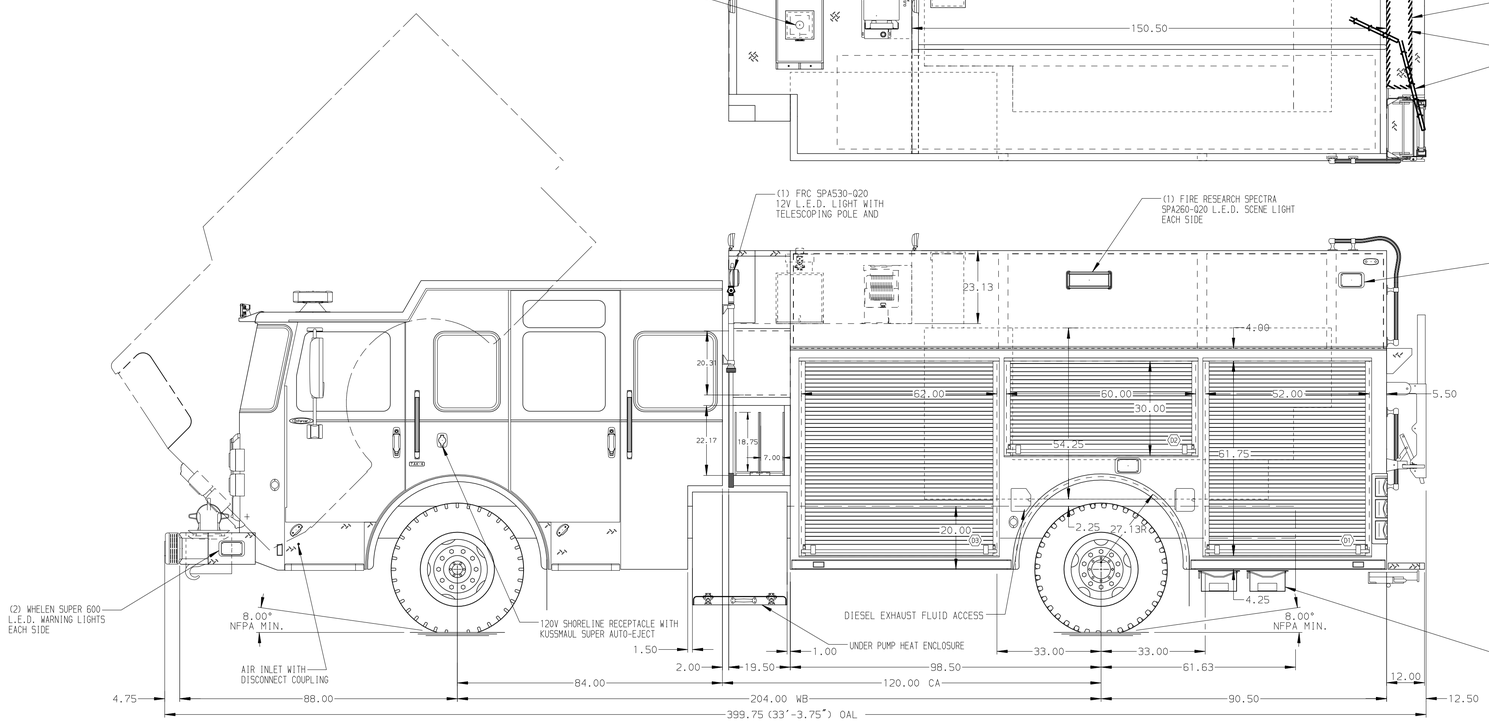

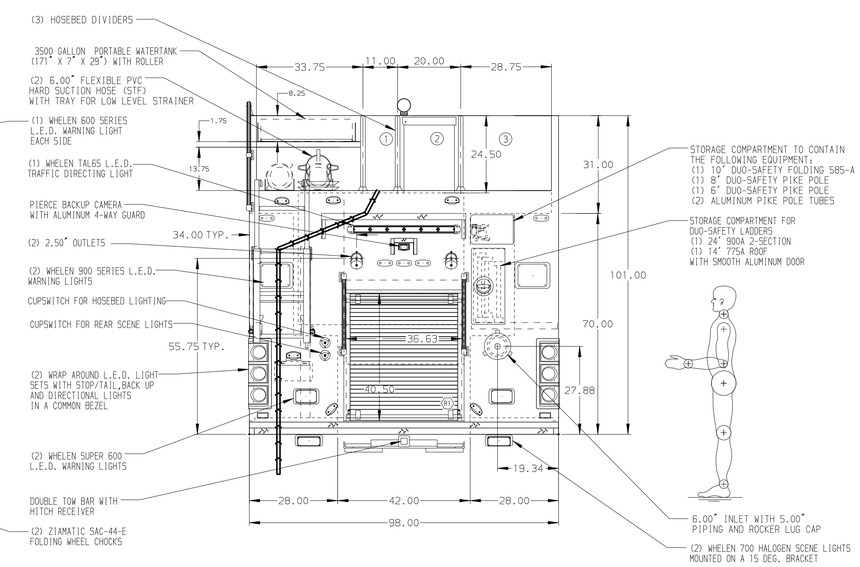

ALUMINUM BODY

SIDE ROLL AND FRONTAL IMPACT PROTECTION

NOTE

DIMENSIONS SHOWN ARE APPROXIMATE AND ARE SUBJECT TO MINOR DEVIATIONS AS MAY OCCUR OR BE NECESSARY IN CONSTRUCTION.
MINOR DETAILS NOT SHOWN.

1. BATTERY CHARGER LOCATED IN D3
2. BATTERY CHARGER INDICATOR LOCATED ON DRIVER'S SEAT RISER
3. ONE FLOOR MOUNTED SLIDE-OUT TRAY IN P3
4. FULL WIDTH/ DEPTH ADJUSTABLE SHELVES TWO IN P3 AND ONE IN D1, D2, D3, R1, P1, AND P2
5. ADJUSTABLE SLIDE-OUT TRAYS TWO IN D3 AND ONE IN D1
6. HONDA EM4000 GENERATOR MOUNTED ON SLIDING TRAY IN P3
7. ONE AKRON ELECTRIC REWIND CORD REEL ERWC-15-10 IN P.S. CARGO AREA WITH 200' OF 10/3 CABLE

REV	DATE	BY	CH
V	20FEB17	LST	JBO
V	31JAN17	LST	JBO
B	11JAN16	LST	JBO
V	15NOV16	LST	MGE

CHASSIS DATA: MAKE PIERCE; MODEL ENFORCER

Pierce MANUFACTURING INC.

TITLE: 1500-D-1125P, 20 GAL FOAM TANK, 189" PUC PUMPER (2) X-LAYS, LADDERS BTWN. TANK AND S. SHEET, DELUGE

FOR: CHIPPEWA VALLEY TECHNICAL COLLEGE EAU CLAIRE, WISCONSIN

DWG NO.: 30663AD

JOB NO.	SCALE	DRAWN BY	CHECKED BY	SHEET SIZE	SHEET NO.
30663	1:24	LST	MGE	D	1 OF 1

DATE: 04NOV16 / 07NOV16

View File Created 21-FEB-2017 08:03:17