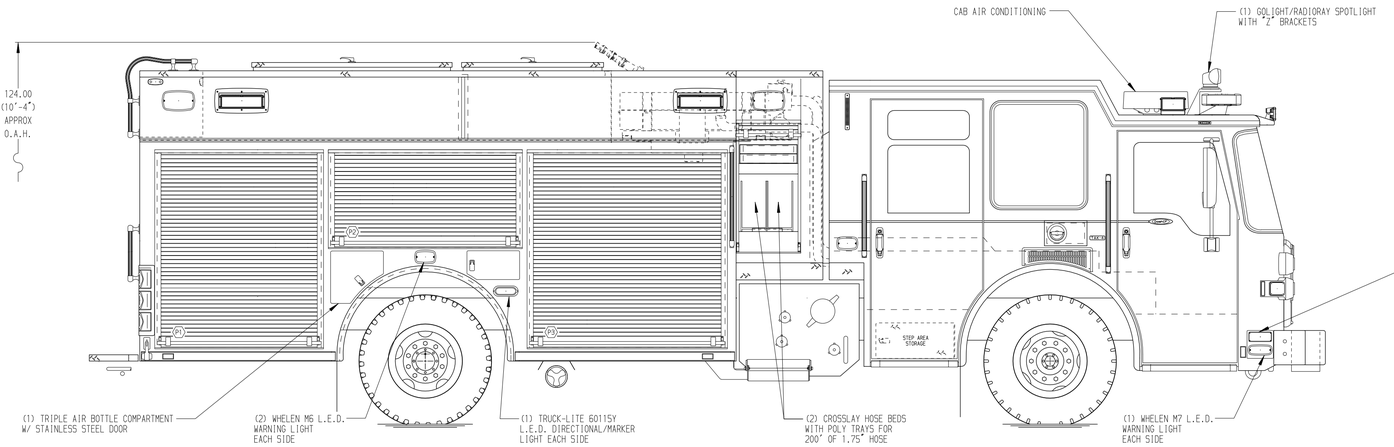

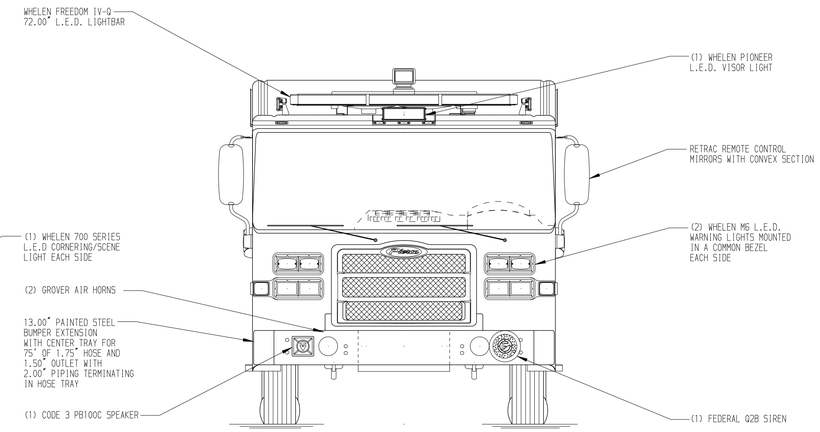

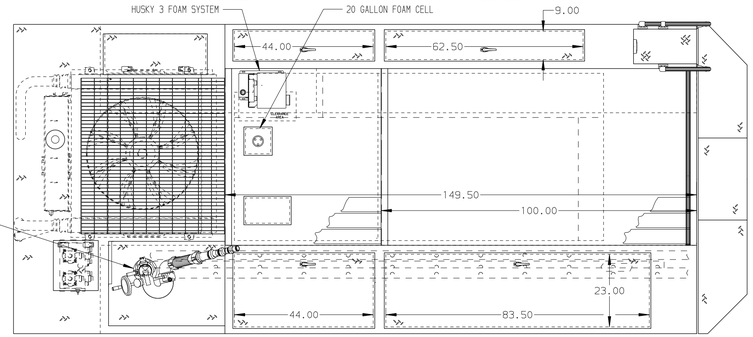

HOSEBED CAPACITIES

1. 600' OF 1.75" D.J. POLY HOSE
2. 800' OF 2.50" D.J. POLY HOSE
2. 600' OF 4.00" D.J. POLY HOSE
2. 600' OF 4.00" D.J. POLY HOSE

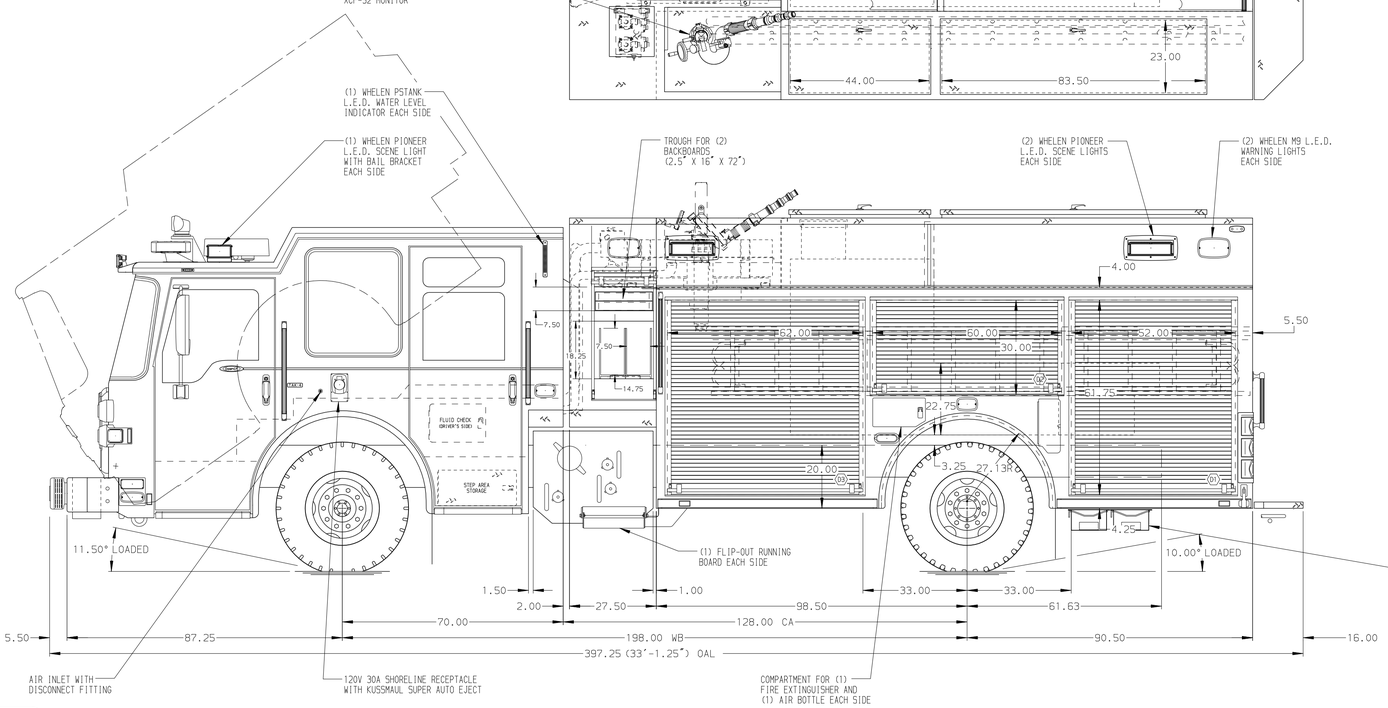

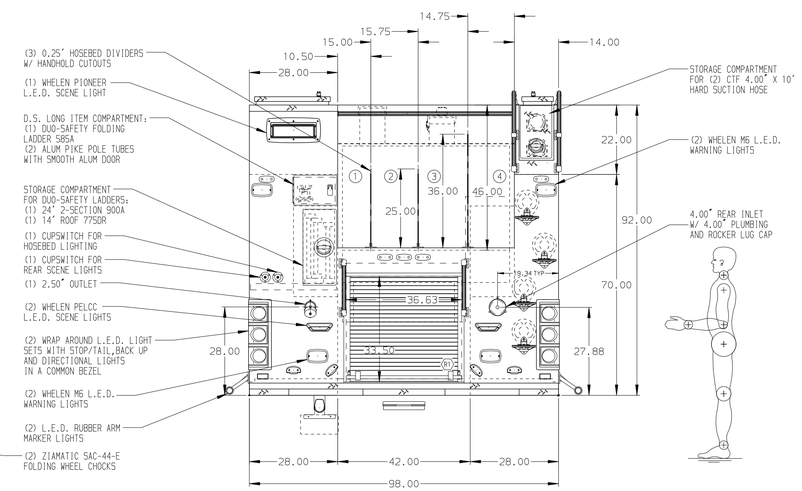

ALUMINUM BODY

NOTE

DIMENSIONS SHOWN ARE APPROXIMATE AND ARE SUBJECT TO MINOR DEVIATIONS AS MAY OCCUR OR BE NECESSARY IN CONSTRUCTION.
MINOR DETAILS NOT SHOWN.

1. ONSPOT AUTOMATIC TIRE CHAINS TO BE PROVIDED AT REAR
2. BATTERY CHARGER LOCATED BEHIND DRIVERS SEAT
3. SUB-FEED CIRCUIT BREAKER PANEL LOCATED BEHING DRIVER SEAT
4. ONE ADJUSTABLE FULL WIDTH/FULL DEPTH SHELF IN COMPARTMENT D2; AND TWO IN D1, D3, P1, & P3
5. ONE SWING-OUT ALUMINUM TOOL BOARD IN COMPARTMENT P2
6. ONE 120V DUPLEX RECEPTACLES LOCATED IN CAB, AND ONE IN COMPARTMENTS D3 & P3

REV	DATE	BY	CH
3	06DEC16	COL	SHA
2	21OCT16	COL	SHA
1	01SEP16	COL	JBL

CHASSIS DATA — MAKE: PIERCE — MODEL: DASH CF

Pierce MANUFACTURING INC.

TITLE: 1500-D-630P W/ 20 GAL FOAM CELL, 189" PUC PUMPER (2)XLAYS, DELUGE, LADDERS BESIDE TANK, REAR INLET

FOR: CLACKAMAS COUNTY FIRE DISTRICT # 1 MILWAUKIE, OREGON

DWG NO. 29958AD

JOB NO.	29958 01-03
SCALE	1:24
DATE	
DRAWN BY	COL 24AUG16
CHECKED BY	JBL 24AUG16
SHEET SIZE	D
SHEET NO.	1 OF 1

View File Created 14-DEC-2016 08:50:01