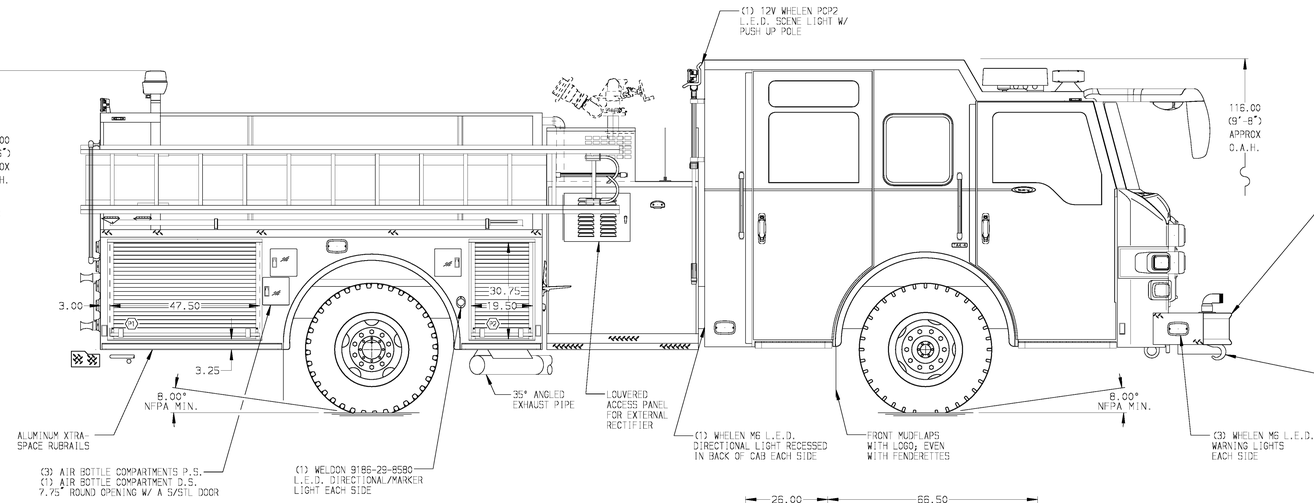

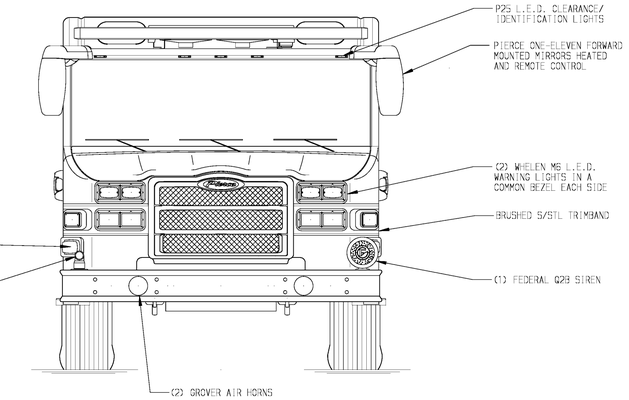

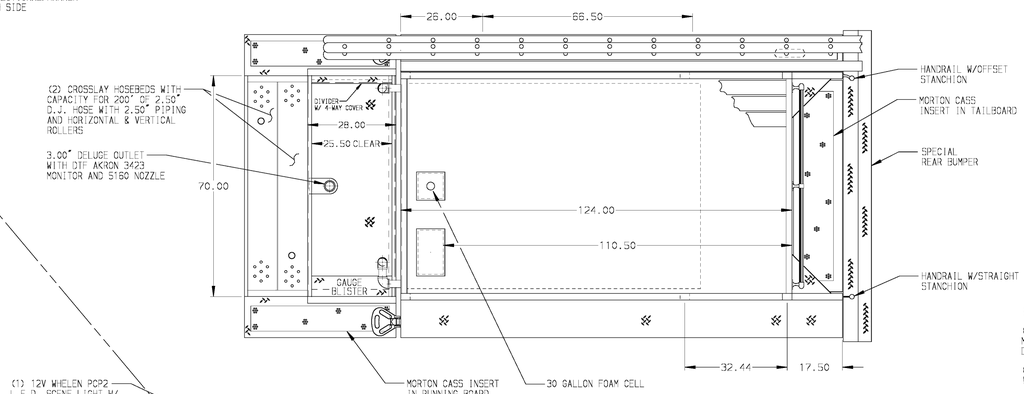

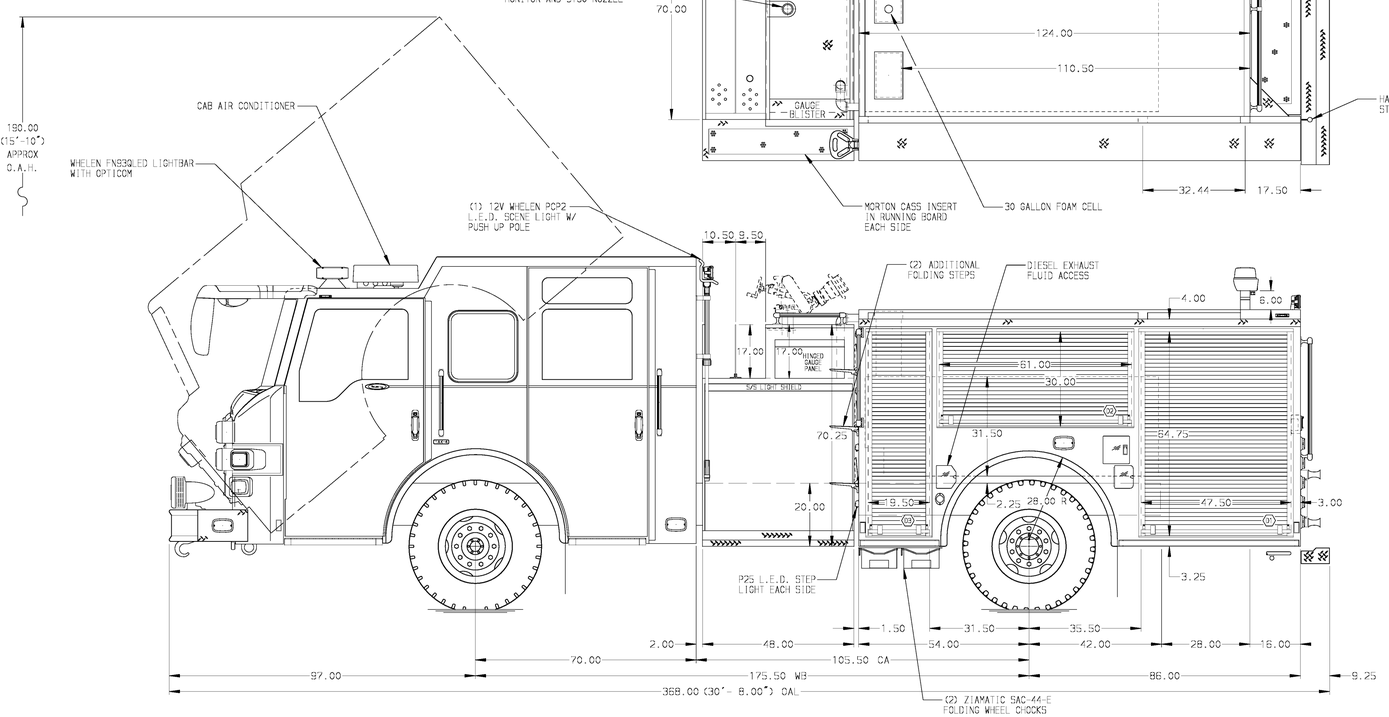

HOSEBED CAPACITIES

1. 300' OF 1.75" D.J. HOSE
2. 500' OF 2.50" D.J. HOSE
3. 500' OF 2.50" D.J. HOSE
4. 500' OF 2.50" D.J. HOSE
5. 300' OF 1.75" D.J. HOSE

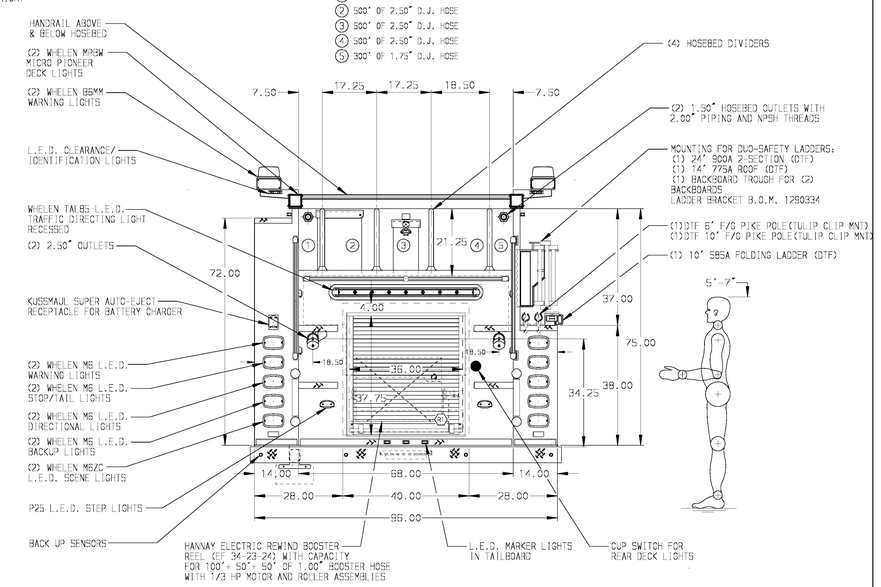

(ALUMINUM BODY) (SIDE ROLL & FRONTAL IMPACT PROTECTION) (O.A.L. TARGET 372.25")

NOTE

DIMENSIONS SHOWN ARE APPROXIMATE AND ARE SUBJECT TO MINOR DEVIATIONS AS MAY OCCUR OR BE NECESSARY IN CONSTRUCTION.
MINOR DETAILS NOT SHOWN.

1. RUD AUTOMATIC TIRE CHAINS TO BE PROVIDED AT REAR
2. AIR INLET WITH DISCONNECT FITTING LOCATED IN DRIVER SIDE STEP WELL
3. AIR OUTLET WITH SHUT OFF VALVE LOCATED IN COMPARTMENT-D3
4. VOGEL LUBE SYSTEM PUMP LOCATED PER SHOP ORDER
5. POLISHED STAINLESS STEEL SCUFFPLATE ON EACH CAB DOOR JAMB
6. ANTENNA WITH MOUNTING BASE LOCATED PER SHOP ORDER
7. BATTERY CHARGER LOCATED IN COMPARTMENT-D3
8. BATTERY CHARGER INDICATOR LOCATED ON DRIVER SEAT WITH BRACKET
9. PERIMETER SCENE LIGHTS LOCATED PER SHOP ORDER
10. ON SCENE SOLUTIONS L.E.D. LIGHT STRIPS IN ALL COMPARTMENTS
11. SHELF TRACKS LOCATED IN COMPARTMENTS D1 & P1
12. 500 LB. FULL WIDTH/DEPTH ADJUSTABLE SHELVES IN COMPARTMENT-ONE IN P1; TWO IN D1
13. REMOVABLE ACCESS PANEL WITH 1/4 TURN FASTENERS IN COMPARTMENT-D3
14. PARTITION BETWEEN COMPARTMENTS D1/R1 AND P1/R1
15. ONE AIR BOTTLE MOUNTING TRACK HOLDER IN COMPARTMENT-D2
16. AKRON EDUCTOR SINGLE AGENT FOAM SYSTEM
17. ONE 6-PLACE RECEPTACLE STRIP LOCATED IN CAB

REV	DATE	BY	CH
V	14SEP15	BZI	LPA
V	31AUG15	COL	JTH
V	06AUG15	COL	LPA

CHASSIS DATA
MAKE: PIERCE
MODEL: VELOCITY FR

Pierce MANUFACTURING INC.

TITLE: 1500-D-500P 140 BODY F.HT.,FRT & REAR-DS,LOW-PS BOOSTER REEL,30G FOAM CELL

FOR: DENVER FIRE DEPARTMENT
DENVER, COLORADO

DWG NO.: 28980AD

JOB NO.	28980 01-03
SCALE	1:24
DATE	
DRAWN BY	COL 22MAY15
CHECKED BY	BZI 22MAY15
SHEET SIZE	D
SHEET NO.	1 OF 1

View File Created 15-SEP-2015 07:31:49