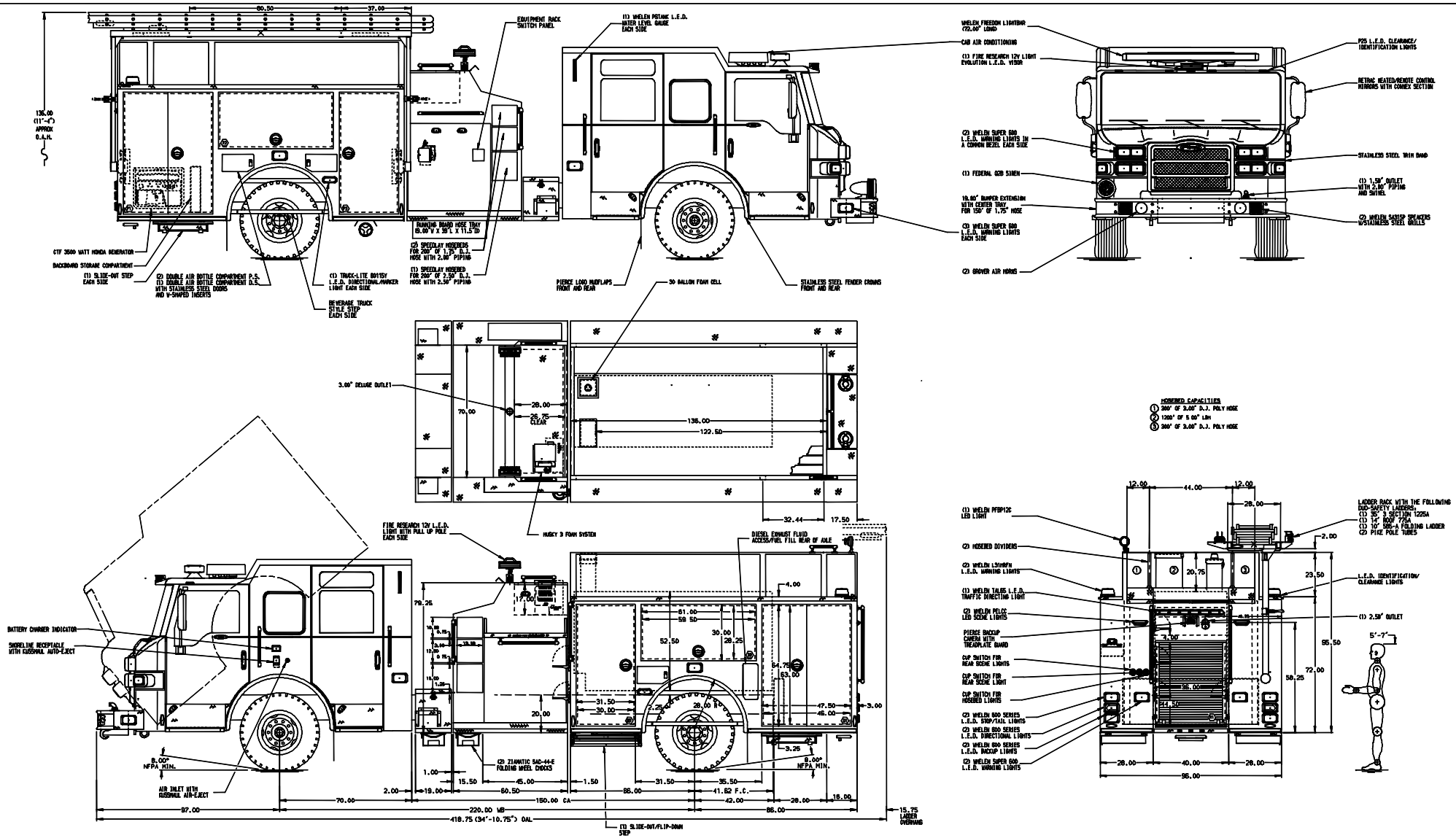

ALUMINUM BODY

NOTE

DIMENSIONS SHOWN ARE APPROXIMATE AND ARE SUBJECT TO MINOR DEVIATIONS AS MAY OCCUR OR BE NECESSARY IN CONSTRUCTION.
MINOR DETAILS NOT SHOWN.

1. ALUMINUM TREADPLATE EXTERIOR REAR WALL OF CAB
2. MOUNTING BASES FOR ANTENNAS LOCATED PER SHOP ORDER
3. BATTERY CHARGER LOCATED IN COMPARTMENT D3
4. PULL STRAP ON DOOR IN COMPARTMENTS D2,P2
5. S/STL SCUFFPLATE (8.00" HIGH) ON INSIDE DOOR OF COMPARTMENT D1,P1
6. PIERCE L.E.D. DUAL COMPARTMENT LIGHT STRIPS LOCATED PER SHOP ORDER
7. PAINTED SHELF TRACKS LOCATED IN COMPARTMENTS D1,D2,D3,P1,P2,P3,R1
8. ONE FULL WIDTH/DEPTH PAINTED ADJUSTABLE SHELF IN COMPARTMENTS D1,D2,D3,P1,P2,TWO IN P3,R1
9. ONE FLOOR MOUNTED SLIDE-OUT TRAY IN COMPARTMENT P1,R1
10. ONE ADJUSTABLE TILTING SLIDE-OUT TRAY IN COMPARTMENT D1,D3,P1,P3
11. ALL FOLDING STEPS TO BE TRIDENT WITH INTEGRATED L.E.D. LIGHT UNLESS SPECIFIED
12. ONE FLOOR MOUNTED SLIDE OUT TRAY 4.00 WIDE LOCATED IN COMPARTMENT D1
13. MAGNETS UNDER SHELVES IN COMPARTMENTS D1,D2,D3,P1,P2

REV	DATE	BY	CH
V	31JUL14	JWD	SHE

CHASSIS DATA: PIERCE
MODEL: IMPEL FR

PIERCE MANUFACTURING INC.

TITLE	1500-D-750P W/306 FOAM,152",FULL HEIGHT,FULL DEPTH TOP MOUNT,(3) SPD-LAYS,DELUGE,LADDER RACK	JOB NO.	27887
FOR	CITY OF EDGEWATER EDGEWATER, FLORIDA	SCALE	1:24
DWG NO.	27887AD	DATE	05MAY14
		DRAWN BY	JWD
		CHECKED BY	MNE
		SHEET SIZE	D
		SHEET NO.	1 OF 1

View File Created 01-AUG-2014 10:15:35