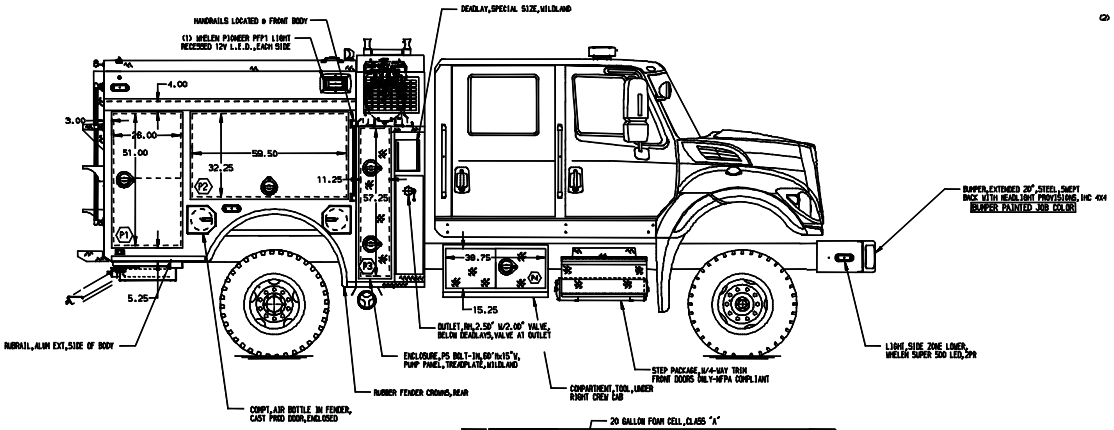

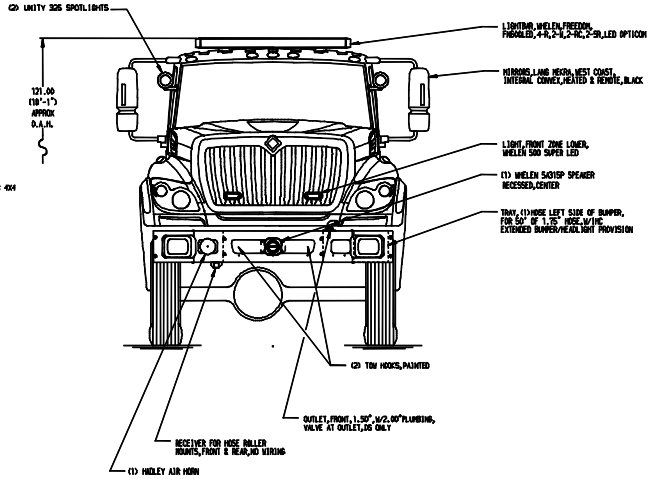

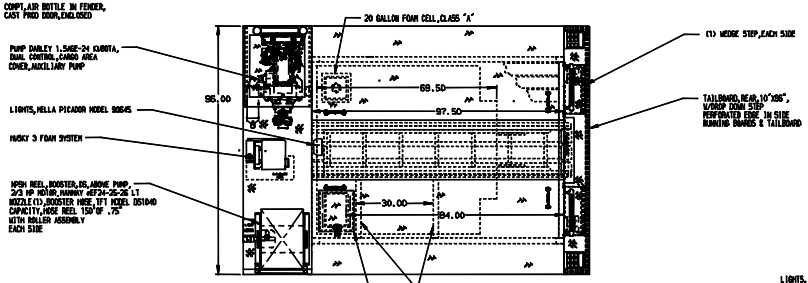

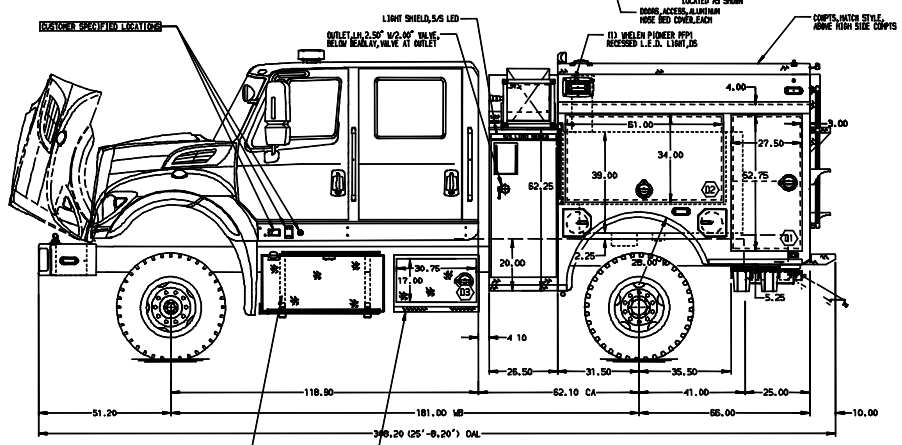

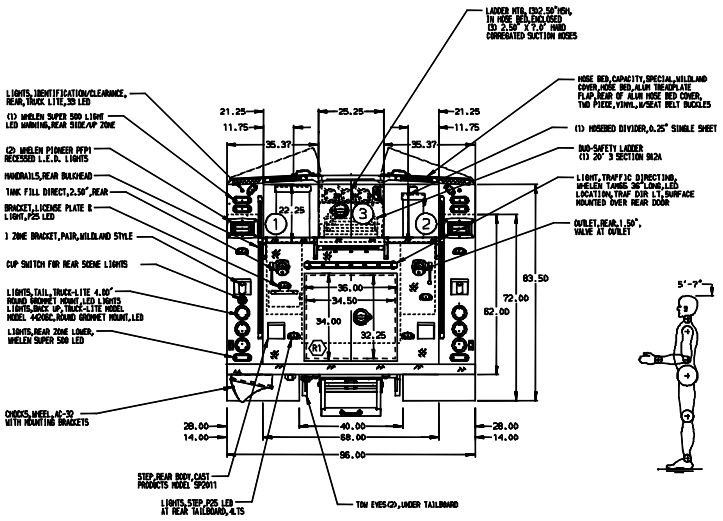

GALVANNEAL BODY

NOTE

DIMENSIONS SHOWN ARE APPROXIMATE AND ARE SUBJECT TO MINOR DEVIATIONS AS MAY OCCUR OR BE NECESSARY IN CONSTRUCTION.
MINOR DETAILS NOT SHOWN.

1. AIR INLET/OUTLET WITH DISCONNECT FITTING LOCATED PER SHOP ORDER
2. EXHAUST SYSTEM,HORIZONTAL,RIGHT SIDE EXIT,7400 4X4,IHC,WILDLAND
3. BATTERY CHARGER LOCATED IN COMPARTMENT D2
4. BATTERY CHARGE INDICATOR LOCATED PER SHOP ORDER
5. JUMPER STUDS,LOCATION UNDER PS CAB
6. PERIMETER SCENE LIGHTS LOCATED PER SHOP ORDER
7. PULL STRAP,BODY DOORS,EACH LOCATED D2,P2
8. KEYED LOCKS FOR LATCHES,LAP DOORS,KEY STYLE 1250
9. PIERCE L.E.D. COMPARTMENT DUAL LIGHT STRIPS LOCATED PER SHOP ORDER
10. SHELF TRACKS LOCATED PER SHOP ORDER
11. FLOOR MOUNTED SLIDE-OUT TRAY IN COMPARTMENT D3
12. SHORELINE,20A 120V,STRAIGHT BLADE,HEVR S-30P LOCATED PER SHOP ORDER
13. -
14. -
15. -
16. -

REV.	DATE	BY	CHK'D	
				CHASSIS DATA
				CHASSIS
V	13AUG14	JCH	VKO	IHC
V	08JUL14	DTA	VKO	MODEL 7400 4 X 4

Pierce MANUFACTURING INC.
BRADENTON, FLORIDA

JOB NO.	27894		
DATE		SCALE	1:24
TITLE	500-D-500 POLY,20 FOAM,SHORT BODY,26.50"SIDE CNTRL DARLEY JMPS00, (1)DEADLAY, (1)REEL,TYPE 3	DRAWN BY	JAF 18MAR14
FOR	ENCINITAS FIRE DEPARTMENT ENCINITAS,CALIFORNIA	CHK'D BY	JCH 28MAR14
DRWG. NO.	27894AD	SHEET NO.	1 of 1
		SHEET SIZE	D

View File Created 13-AUG-2014 16:01:05