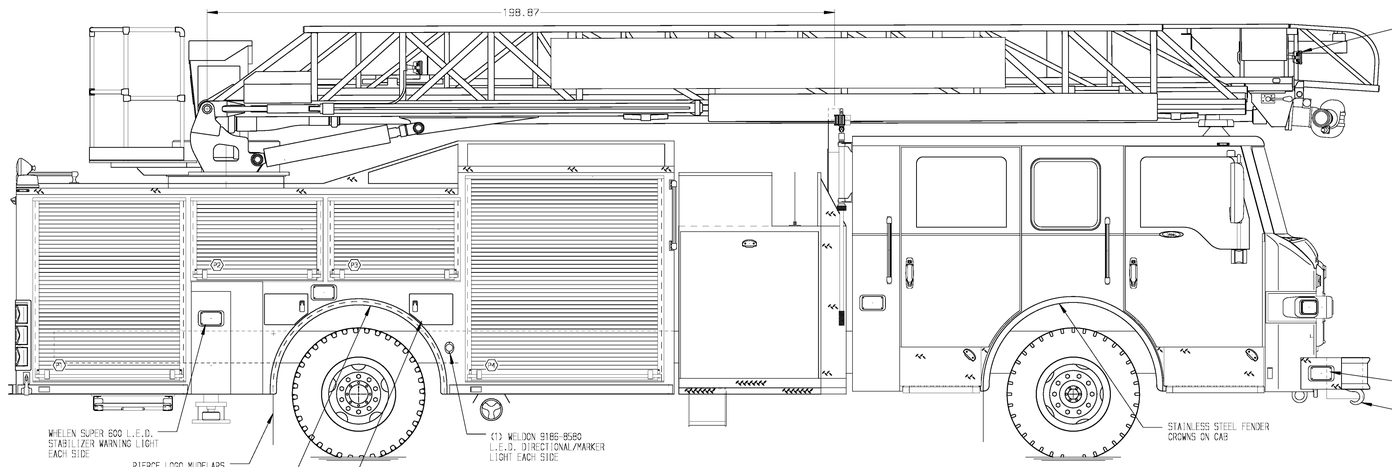

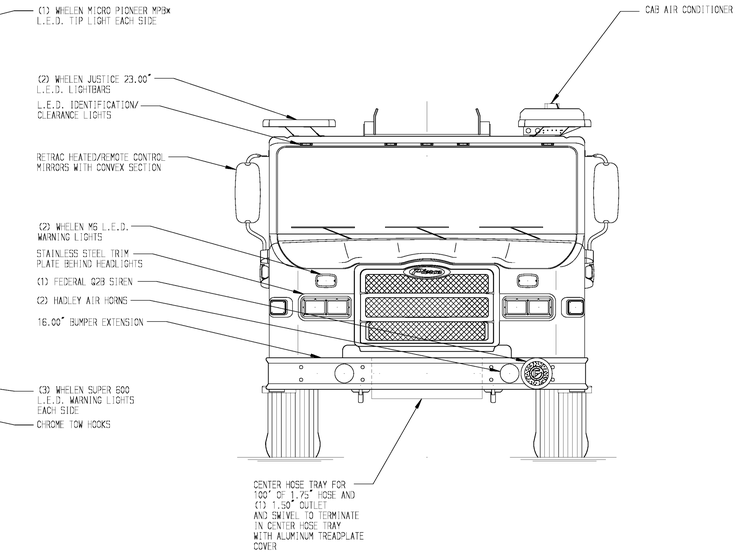

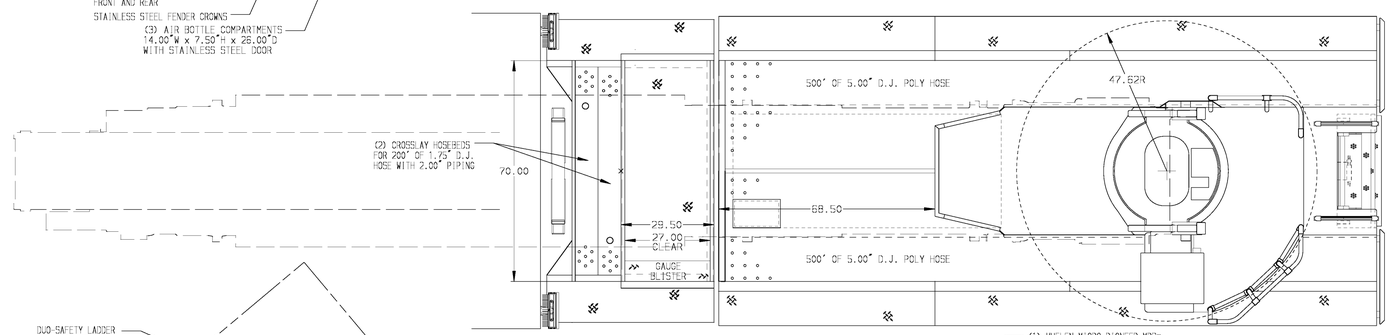

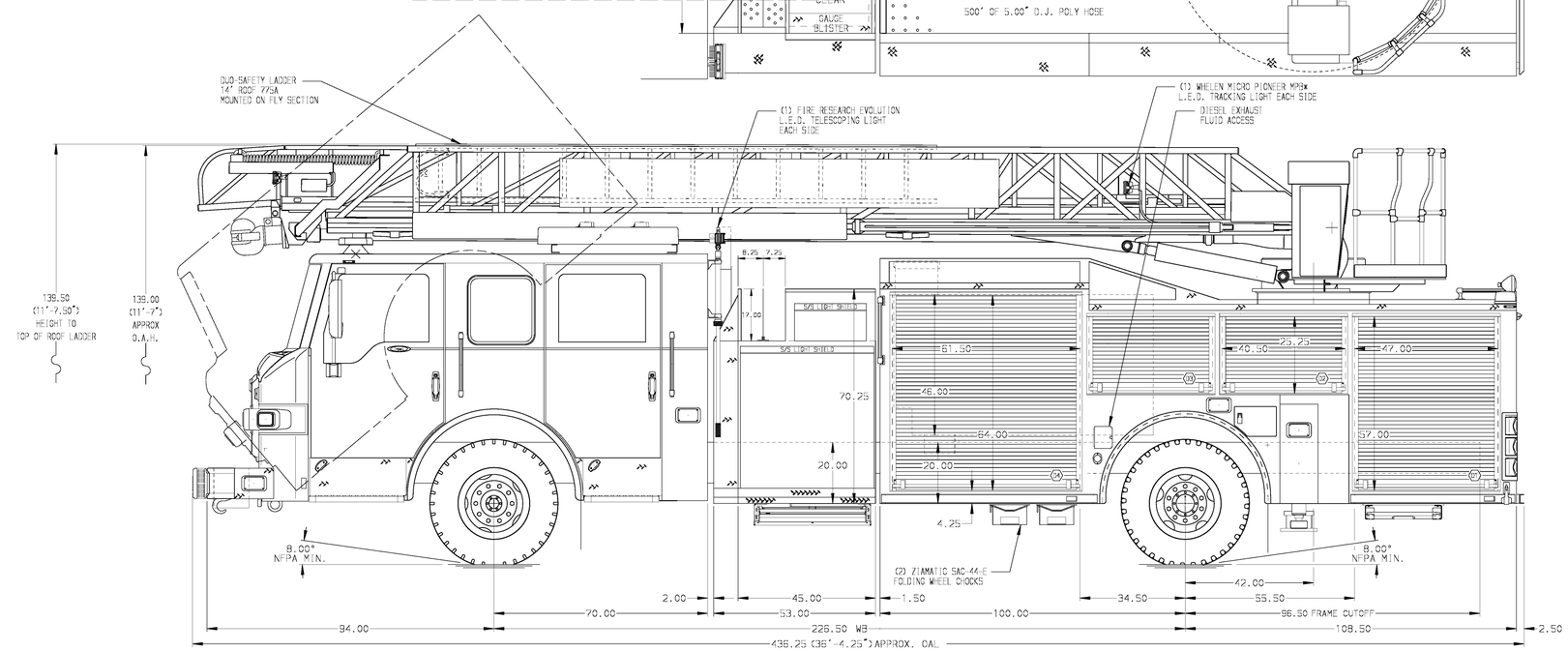

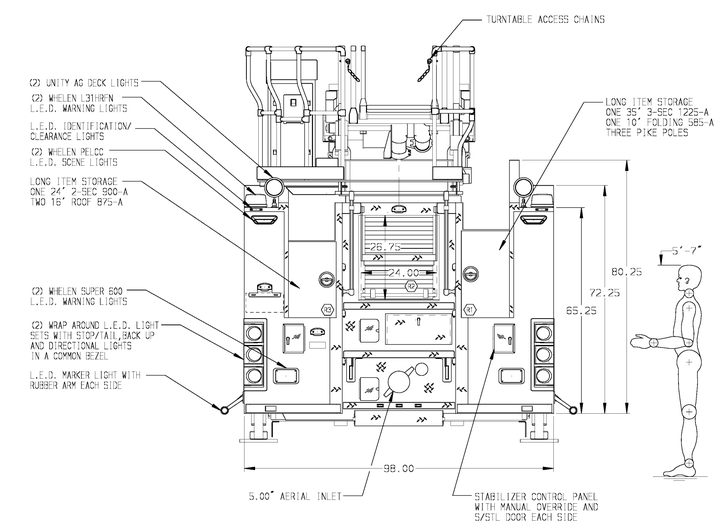

ALUMINUM BODY

MAXIMUM O.A.H. 140"

NOTE

DIMENSIONS SHOWN ARE APPROXIMATE AND ARE SUBJECT TO MINOR DEVIATIONS AS MAY OCCUR OR BE NECESSARY IN CONSTRUCTION.
MINOR DETAILS NOT SHOWN.

1. BATTERY CHARGER LOCATED IN COMPARTMENT D4
2. PERIMETER SCENE LIGHTS LOCATED PER SHOP ORDER
3. PIERCE L.E.D. COMPARTMENT LIGHT STRIPS LOCATED PER SHOP ORDER
4. TRIDENT FOLDING STEPS MOUNTED ON AERIAL DEVICE PER SHOP ORDER
5. FIRE RESEARCH 3-WAY INTERCOM SYSTEM BETWEEN AERIAL TIP,PUMP PANEL & TURNTABLE
6. AERIAL PEDESTAL RAISED 1.50"
7. 1500 GPM HIGH FLOW WATERWAY
8. ONE SHORELINE RECEPTACLE WITH KUSSMAUL SUPER AUTO-EJECT LOCATED AT DRIVERS SIDE PUMP PANLEL PER SHOP ORDER
9. ONE 20A 120V 6-PLACE RECEPTACLE STRIP LOCATED IN CAB PER SHOP ORDER
10. AIR INLET/OUTLET WITH DISCONNECT FITTING LOCATED ON THE DRIVER SIDE PUMP PANEL
11. ONE ADJUSTABLE FULL WIDTH/FULL DEPTH SHELF IN COMPARTMENT D1,P1,P4
12. ONE SLIDE-OUT ALUMINUM TOOL BOARD IN COMPARTMENT D4

REV	DATE	BY	CH
V	10SEP15	TKA	ANG

CHASSIS DATA
MAKE: PIERCE
MODEL: IMPEL

Pierce MANUFACTURING INC.

TITLE: 75 AERIAL LADDER & BODY ASSEMBLY
500 GALLON WATER TANK
FOR: MILLARD COUNTY FIRE DISTRICT
FILLMORE, UT
DWG NO.: 29141AD

JOB NO.	29141
SCALE	1:24
DATE	
DRAWN BY	JGA
13JUL15	
CHECKED BY	GRM
14JUL15	
SHEET SIZE	D
SHEET NO.	1 OF 1

View File Created 11-SEP-2015 07:03:54