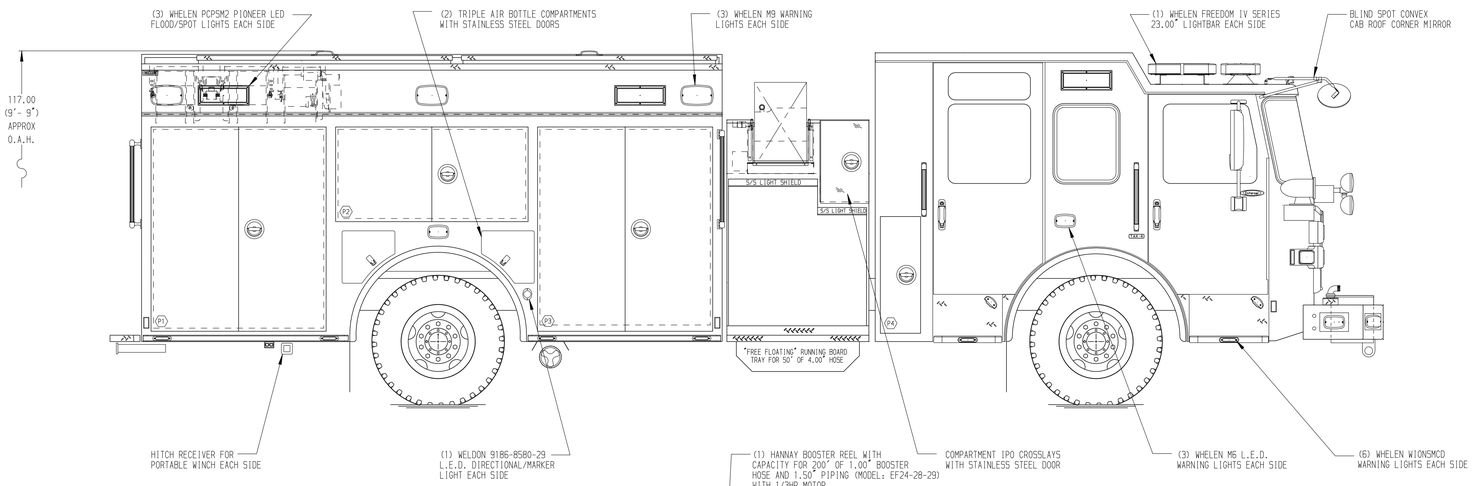

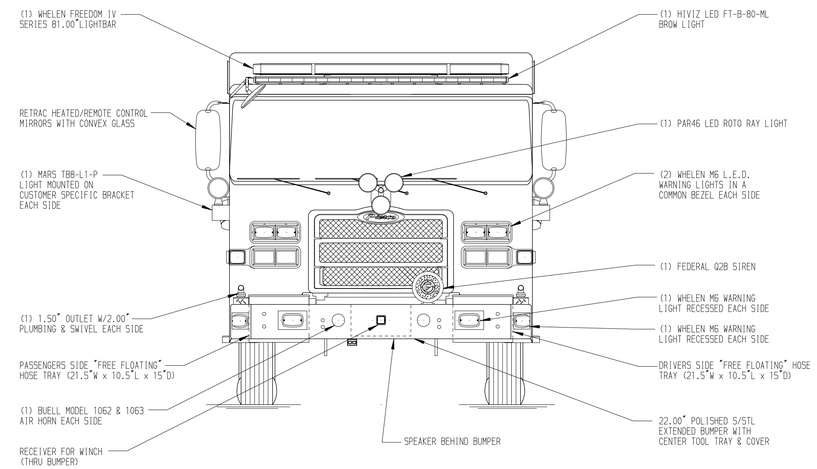

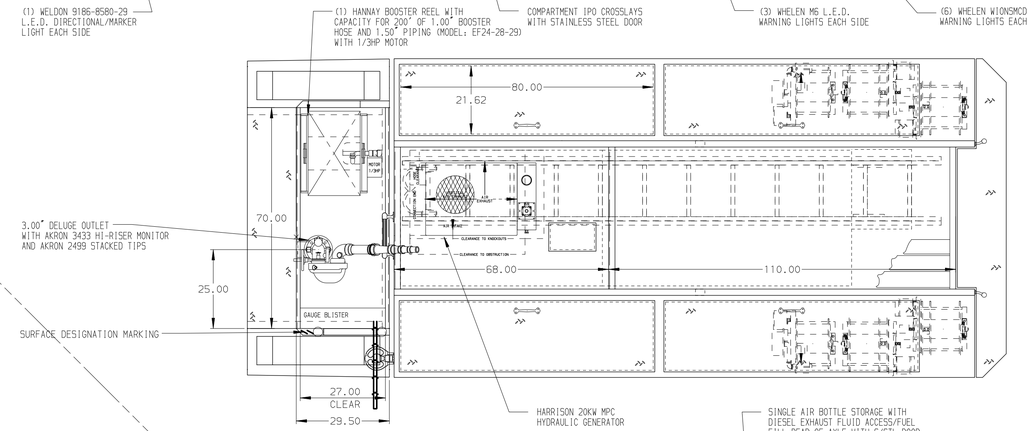

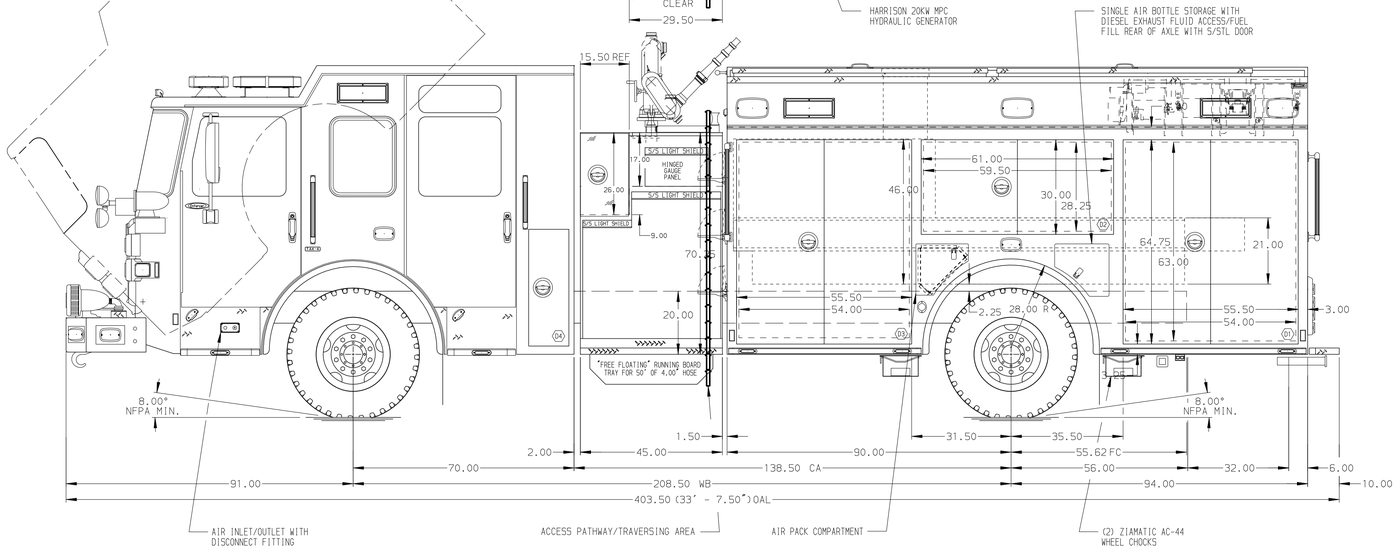

HOSEBED CAPACITIES
1. - 400" OF 1.50" HOSE (SPLIT BY DIVIDER)
2. - 250' OF 1.50" HOSE
3. - 800' OF 3.00" HOSE
4. - 800' OF 3.00" HOSE

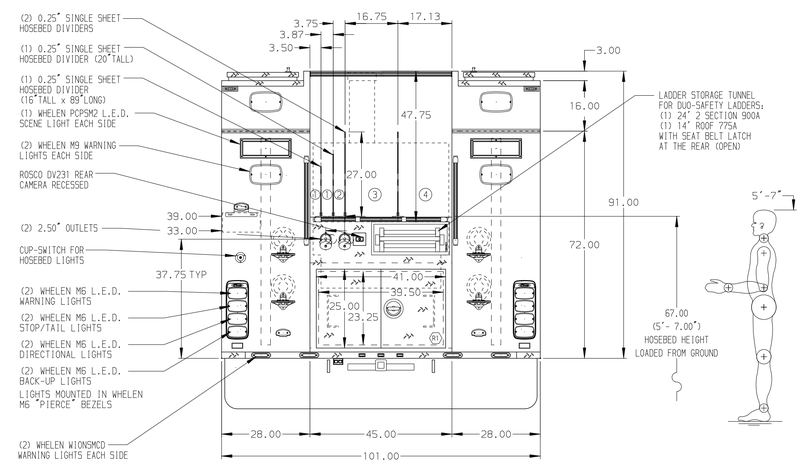

STAINLESS STEEL BODY

NOTE
DIMENSIONS SHOWN ARE APPROXIMATE AND ARE SUBJECT TO MINOR DEVIATIONS AS MAY OCCUR OR BE NECESSARY IN CONSTRUCTION.
MINOR DETAILS NOT SHOWN.

1. INSTA-CHAIN AUTOMATIC TIRE CHAINS TO BE PROVIDED AT REAR
2. BATTERY CHARGE INDICATOR LOCATED ON DRIVER'S SEAT RISER
3. SHORELINE RECEPTACLE WITH KUSSMAUL SUPER AUTO-EJECT LOCATED ON DS PUMP PANEL
4. ONE CUSTOMER TO INSTALL 10' DUO-SAFETY FOLDING LADDER SHIPPED LOOSE
5. ONE 10' DUO-SAFETY 701 FRESNO LADDER SHIPPED LOOSE
6. ONE 8' FIRE HOOKS UNLIMITED PIKE POLE SHIPPED LOOSE
7. ONE 6' FIRE HOOKS UNLIMITED PIKE POLE SHIPPED LOOSE

REV	DATE	BY	CH
4	24APR17	AMI	TWH
3	21MAR17	AMI	TWH
2	13JAN17	MMF	WKL

CHASSIS DATA
MAKE: PIERCE
MODEL: ENFORCER

Pierce MANUFACTURING INC.

TITLE: 1250-D-500P NEW YORK STYLE HOSEBED, 184" HDRP BODY DELUGE, GENERATOR, BOOSTER REEL, LADDERS THRU TANK
FOR: GLENN DALE FIRE ASSOCIATION, GLENN DALE, MARYLAND
DWG NO.: 30892AD-SH1

JOB NO.	30892
SCALE 1:24	DATE
DRAWN BY AMI	05JAN17
CHECKED BY WKL	05JAN17
SHEET SIZE D	SHEET NO. 1 OF 2

View File Created 25-APR-2017 07:55:46