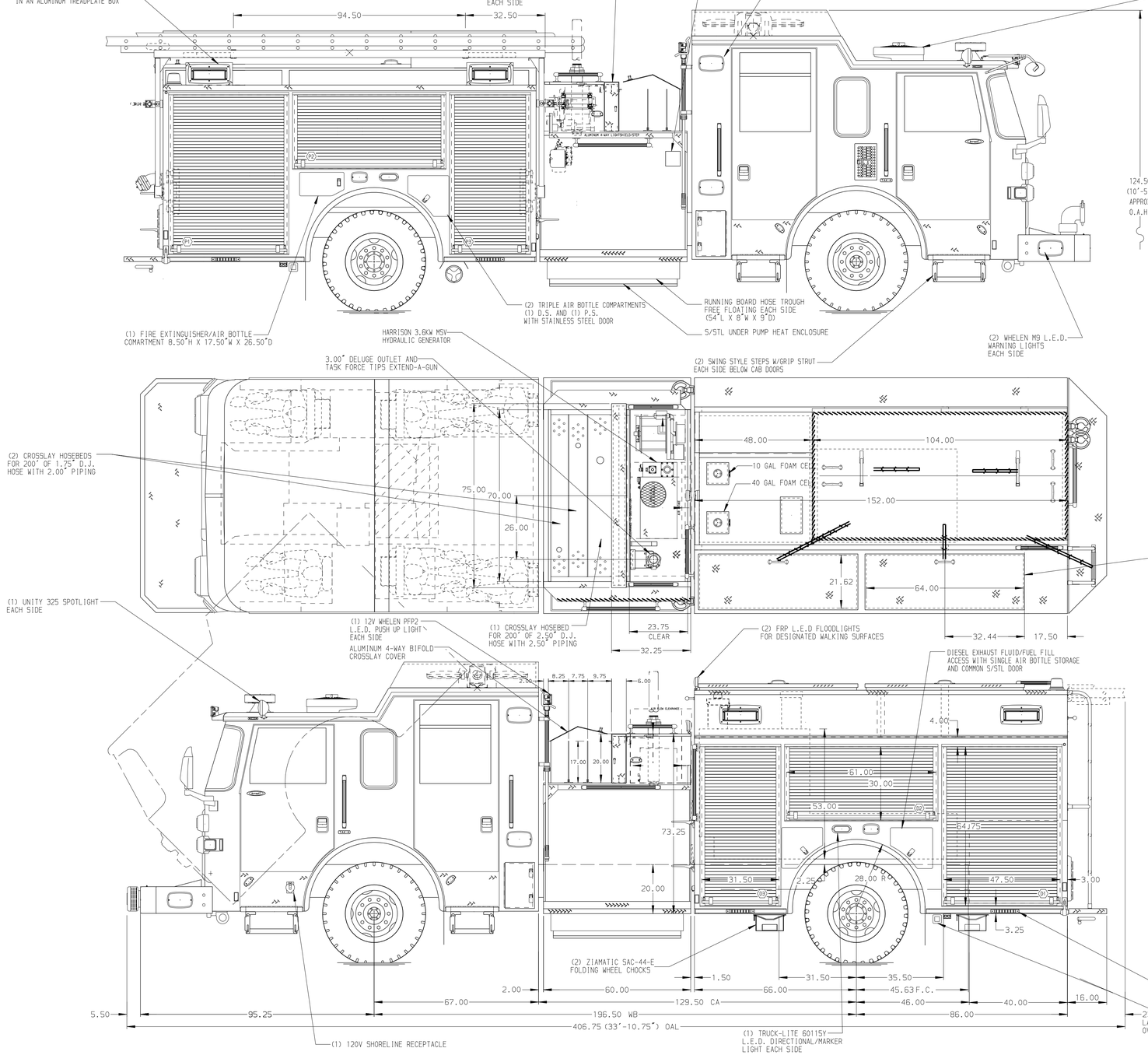

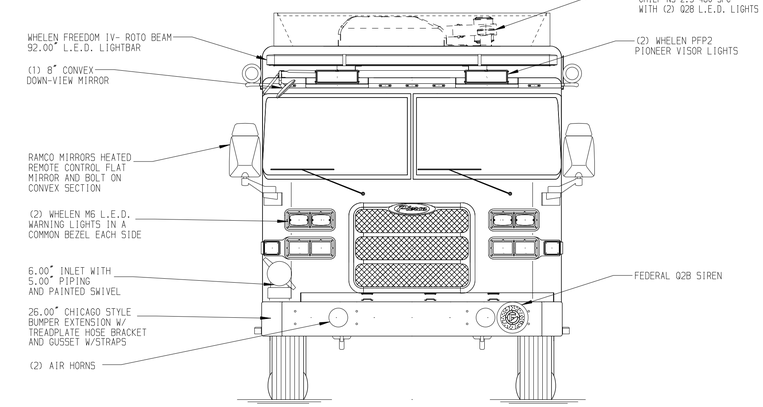

HOSEBED CAPACITIES
1. 600' OF 2.50" D.J. HOSE
2. 600' OF 2.50" D.J. HOSE
3. 1000' OF 4.00" D.J. HOSE

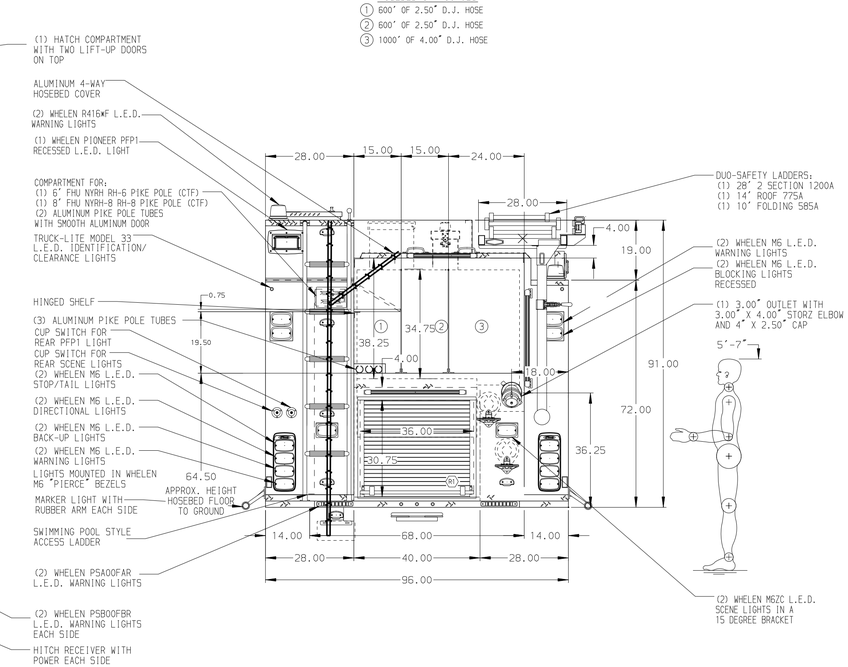

STAINLESS STEEL BODY

Pierce MANUFACTURING INC.

NOTE

DIMENSIONS SHOWN ARE APPROXIMATE AND ARE SUBJECT TO MINOR DEVIATIONS AS MAY OCCUR OR BE NECESSARY IN CONSTRUCTION.
MINOR DETAILS NOT SHOWN.

1. BATTERY CHARGER LOCATED IN COMPARTMENT D3 HIGH AS POSSIBLE
2. BATTERY CHARGER INDICATOR LOCATED ON THE DRIVER'S SEAT RISER
3. ONE FLOOR MOUNTED SLIDE-OUT TRAY IN COMPARTMENTS D1, D3, R1, P1, AND P3
4. ONE ADJUSTABLE TILTING SLIDE-OUT TRAY IN COMPARTMENTS D2 AND TWO IN D1
5. ONE VERTICAL PARTITION IN COMPARTMENT D3
6. ONE SLIDE-OUT TOOL BOARD IN COMPARTMENT D3
7. ONE ADJUSTABLE SHELF IN COMPARTMENTS P1 UPPER, AND P3 UPPER, TWO IN D3 FORWARD OF THE PARTITION
8. CIRCUIT BREAKER PANEL IN COMPARTMENT D3
9. ONE HANNAY ELECTRIC REWIND CORD REEL MODEL 1618-17-18 LOCATED IN CARGO AREA ABOVE PUMP WITH 200' OF 10/3 CABLE, GFE EJB JUNCTION BOX, AND A CAPTIVE ROLLER ASSEMBLY
10. TWO 120V DUPLEX RECEPTACLES LOCATED IN THE EMS COMPARTMENT
11. ELKHART EDUCATOR 240-125P FOAM SYSTEM

REV	DATE	BY	CH
V	14JAN17	LST	JBO
V	06DEC16	LST	JBO
V	14OCT16	LST	MGE

CHASSIS DATA	
MAKE	PIERCE
MODEL	ARROW XT
TITLE	1500-D-550 500 GAL WATER,10 & 40 GAL FOAM CELLS,152" BDY,DS FL HGHT & DPTH FRNT & RR,PS FL HGHT FRNT & RR
FOR	GLENVIEW FIRE DEPARTMENT GLENVIEW, ILLINOIS
DWG NO.	30628AD
JOB NO.	30628
SCALE	1:24
DATE	
DRAWN BY	LST 030CT16
CHECKED BY	MGE 050CT16
SHEET SIZE	D
SHEET NO.	1 OF 1

View File Created 18-JAN-2017 06:48:34