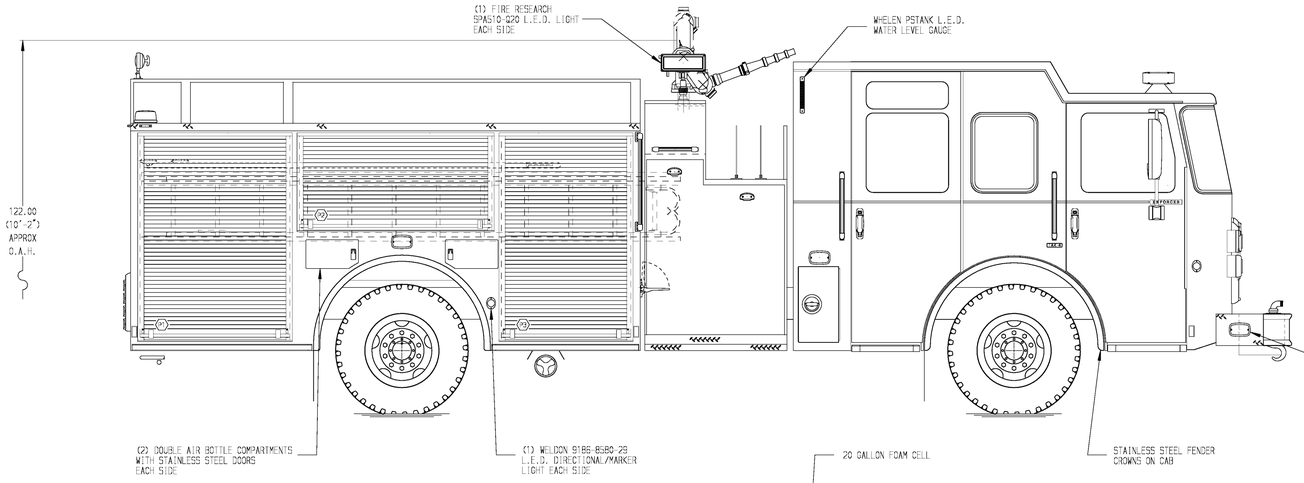

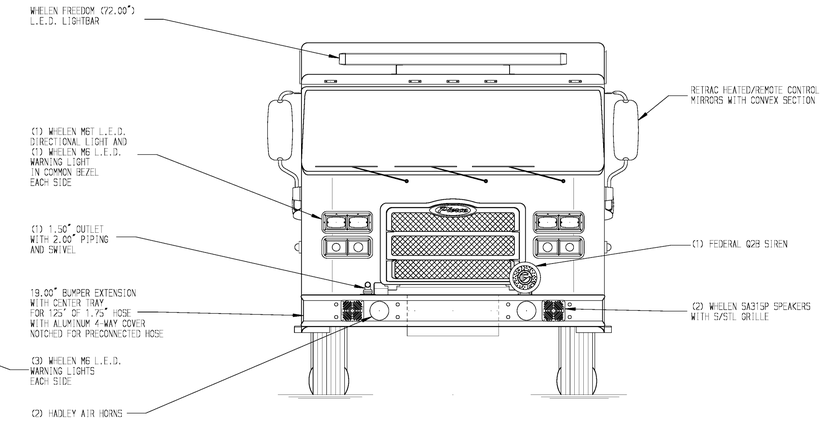

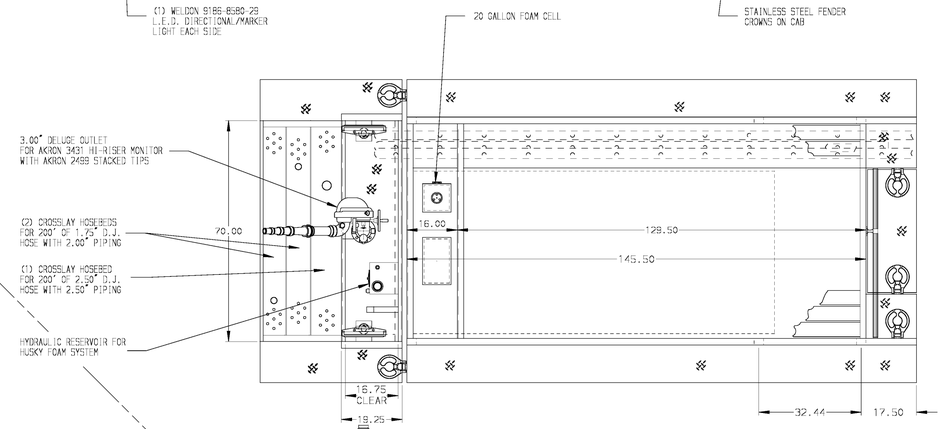

HOSEBED CAPACITIES

1. 500' OF 3.00" D.J. POLY HOSE
2. 1000' OF 5.00" D.J. POLY HOSE
3. 500' OF 3.00" D.J. POLY HOSE

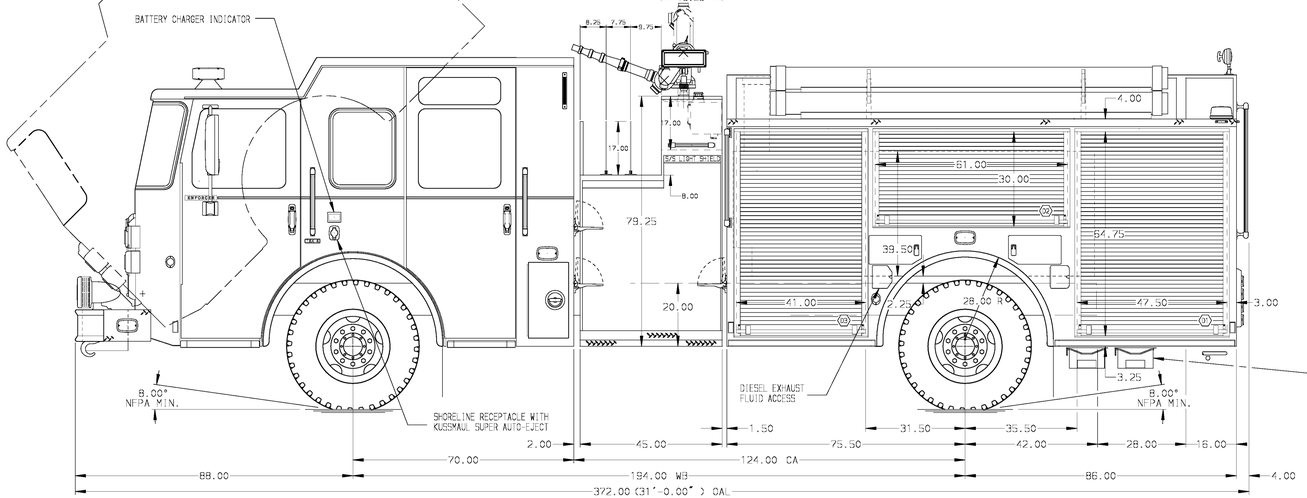

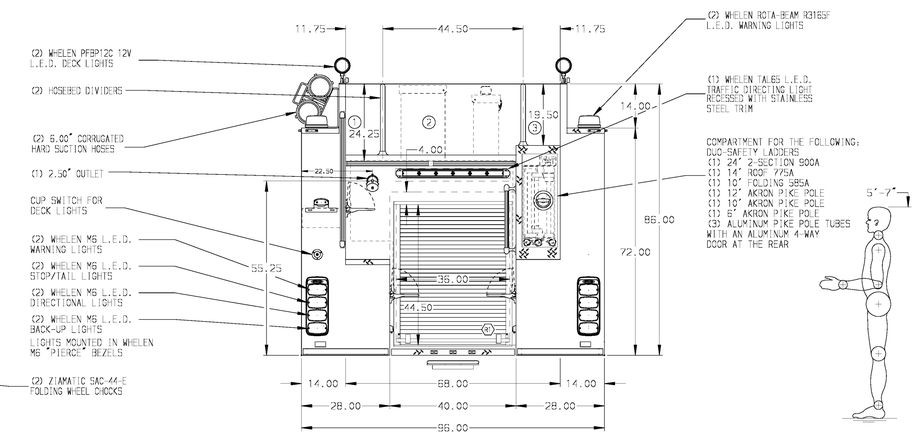

ALUMINUM BODY

SIDE ROLL AND FRONTAL IMPACT PROTECTION

NOTE

DIMENSIONS SHOWN ARE APPROXIMATE AND ARE SUBJECT TO MINOR DEVIATIONS AS MAY OCCUR OR BE NECESSARY IN CONSTRUCTION.
MINOR DETAILS NOT SHOWN.

1. ONSPOT AUTOMATIC TIRE CHAINS TO BE PROVIDED AT REAR
2. S/STL SCUFFPLATE ON EACH CAB DOOR JAMB
3. BATTERY CHARGER LOCATED IN COMPARTMENT D3
4. S/STL DRIP PAN/GUARD FOR ROLL-UP DOOR LOCATED IN ALL COMPARTMENTS
5. ONE FULL WIDTH/DEPTH PAINTED ADJUSTABLE SHELF IN COMPARTMENT R1, TWO IN D1,D3,P1,P3
6. ONE FLOOR MOUNTED SLIDE-OUT TRAY IN COMPARTMENT D3,R1
7. SWING-OUT TOOL BOARD WITH PEGBOARD PATTERN IN COMPARTMENT D2
8. AIR INLET WITH DISCONNECT COUPLING LOCATED ON D.S. PUMP PANEL
9. TWO DUPLEX RECEPTACLES IN CAB

REV	DATE	BY	CH
3	09DEC15	JWO	JJR
2	07OCT15	JWO	JJR
1	10SEP15	JWO	KBO

CHASSIS DATA
MAKE: PIERCE
MODEL: ENFORCER

Pierce MANUFACTURING INC.

TITLE: 1750-D-750P W/200 FOAM,161",FULL HEIGHT,FDLER (3) X-LAYS,DELUGE

FOR: CITY OF LOUDON FIRE DEPARTMENT
LOUDON, TENNESSEE

DWG NO.: 29361AD

JOB NO.	SCALE	DRAWN BY	CHECKED BY	SHEET SIZE	SHEET NO.
29361	1:24	JWO	KBO	D	1 OF 1

DATE: 27AUG15

View File Created 10-DEC-2015 07:14:50