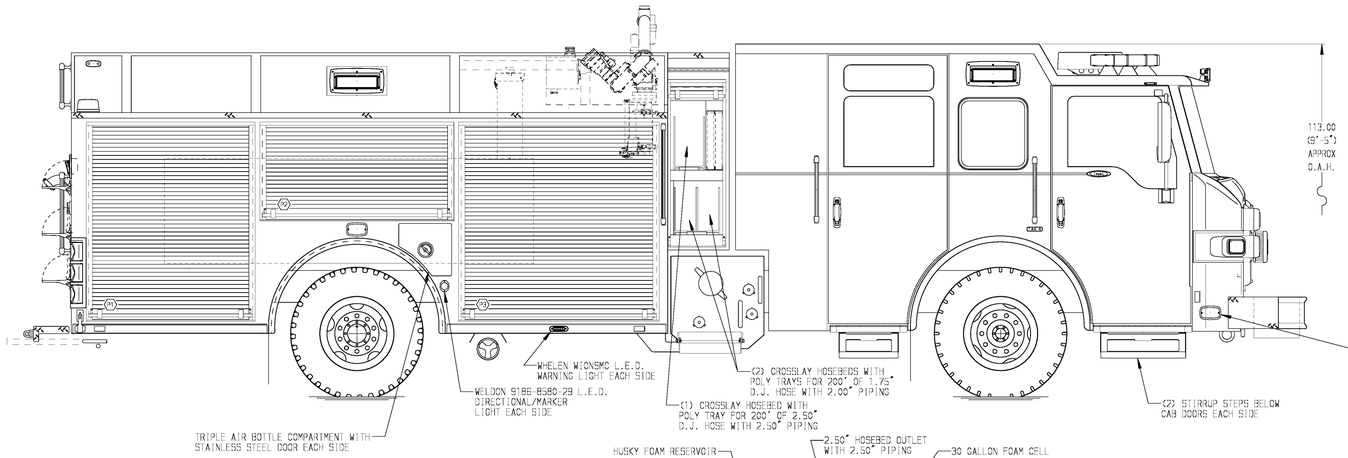

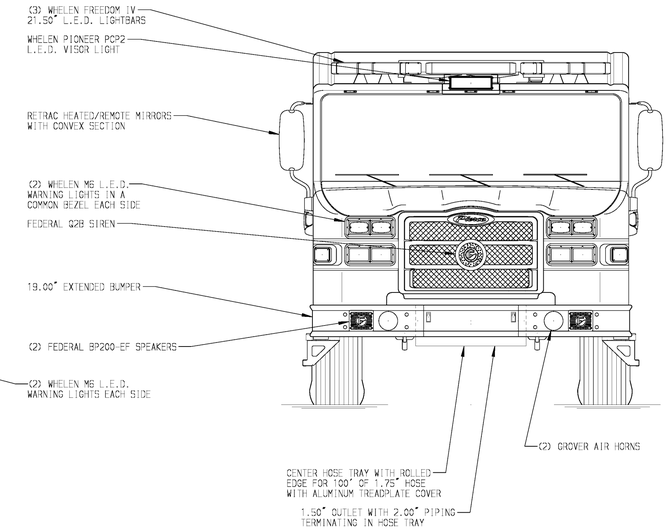

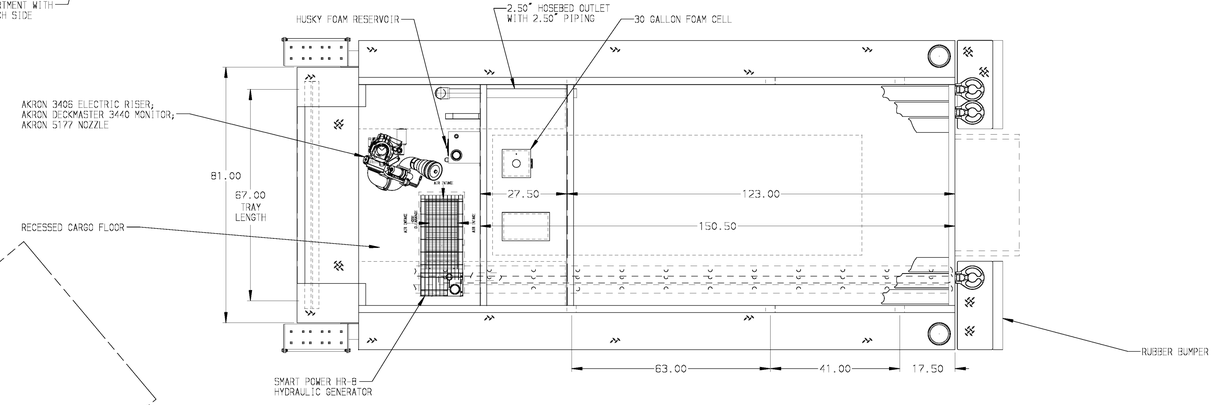

HOSEBED CAPACITIES

1. 1000' OF 5.00" D.J. POLY HOSE
2. 400' OF 3.00" D.J. POLY HOSE
3. 300' OF 1.75" D.J. POLY HOSE
4. 250' OF 3.00" D.J. POLY HOSE

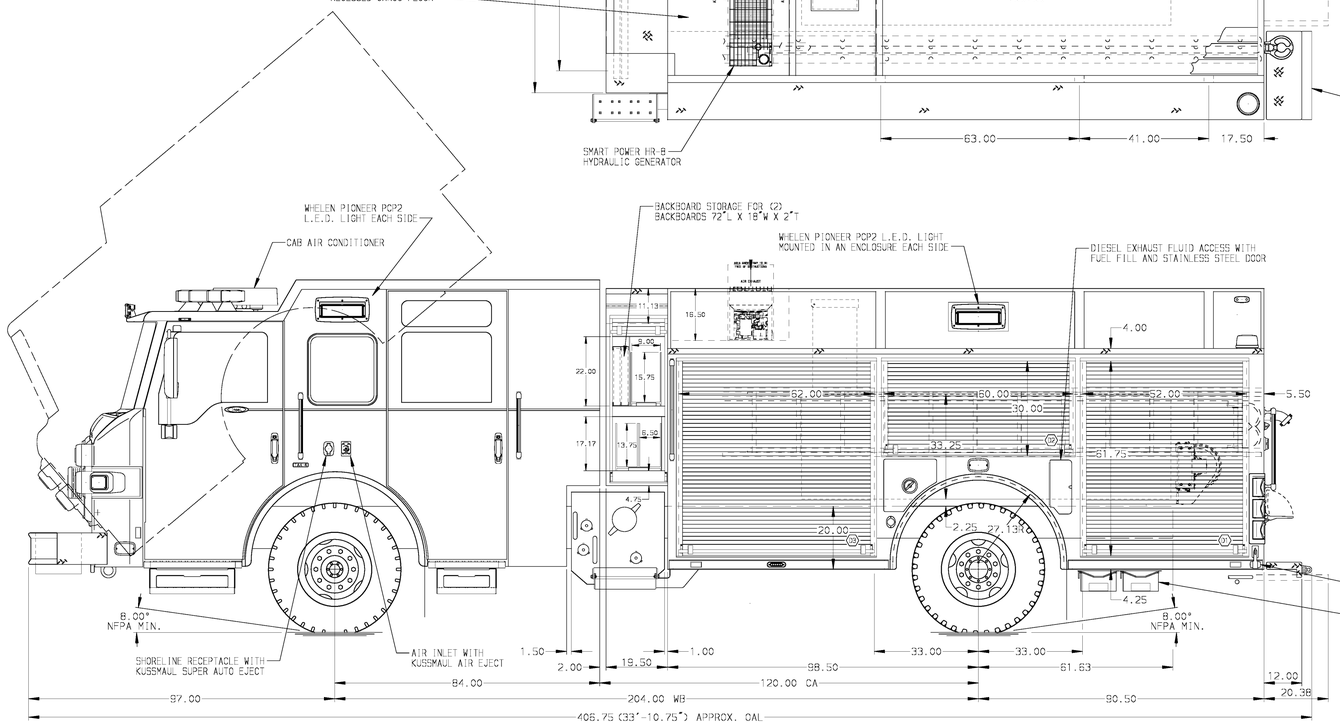

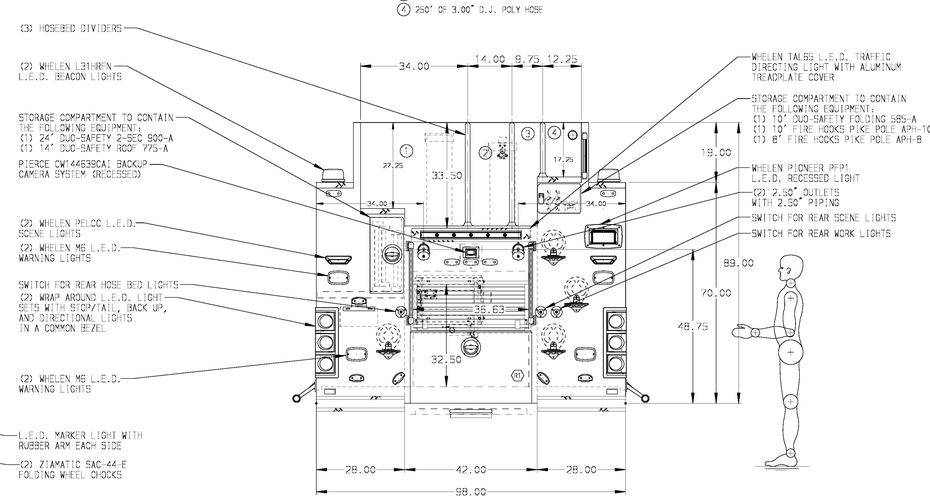

ALUMINUM BODY | MAXIMUM O.A.H. 115.00" | MAXIMUM O.A.L. 408.00" | SIDE ROLL & FRONTAL IMPACT PROTECTION

NOTE

DIMENSIONS SHOWN ARE APPROXIMATE AND ARE SUBJECT TO MINOR DEVIATIONS AS MAY OCCUR OR BE NECESSARY IN CONSTRUCTION.
MINOR DETAILS NOT SHOWN.

1. BATTERY CHARGER LOCATED IN COMPARTMENT-P3
2. BATTERY CHARGER INDICATOR LOCATED ON DRIVER SEAT WITH BRACKET
3. FULL WIDTH/DEPTH ADJUSTABLE SHELVES IN COMPARTMENT-D1,D2
4. ADJUSTABLE SLIDE-OUT TRAY WITH 2" SIDES IN COMPARTMENT-P1
5. ADJUSTABLE FULL WIDTH/DEPTH TILT/SLIDE-OUT TRAYS IN COMPARTMENT-P1,P3
6. FLOOR MOUNTED SLIDE-OUT TRAYS WITH 2" SIDES IN COMPARTMENT-D1,D3,P3,R1
7. ALUMINUM TOOLBOARDS MOUNTED TO SLIDE-OUT TRAY IN COMPARTMENT-ONE IN D3,TWO IN P3
8. ALUMINUM SWING-OUT TOOLBOARDS WITH PEGBOARD PATTERN IN COMPARTMENT-TWO IN P2
9. POLY TOOL BOXES IN COMPARTMENT-TWO IN P1
10. STORAGE RACK FOR (3) AIR BAGS IN COMPARTMENT-P1
11. THREE ADDITIONAL POLY TRAYS SHIPPED LOOSE
12. CIRCUIT BREAKER PANEL IN COMPARTMENT-D3
13. SUB FEED BREAKER BOX IN COMPARTMENT-R1
14. ONE HANNAY-ELFCR16TB-14-16 3-WIRE ELECTRIC REWIND CORD REEL WITH 200' OF 12/3 CABLE IN COMPARTMENT-R1
15. ONE DUPLEX RECEPTACLE IN COMPARTMENT-D1,D2,D3,P1,P2,P3
16. ONE TWIST LOCK RECEPTACLE IN COMPARTMENT-R1

REV	DATE	BY	CH
V	19JAN16	BST	CDR
V	10DEC15	BST	CDR
V	16OCT15	DDD	CDU

CHASSIS DATA
MAKE: PIERCE
MODEL: IMPEL FR

Pierce MANUFACTURING INC.

TITLE: 1500-D-500P W/30 GAL. FOAM CELL; DELUGE; GENERATOR 189" PUC PUMPER; LADDERS THRU BODY; HUSKY FOAM SYS.
FOR: OREGON FIRE DEPARTMENT, OREGON, OH
DWG NO.: 29358AD

JOB NO.	SCALE	DRAWN BY	CHECKED BY	SHEET SIZE	SHEET NO.
29358 01-02	1:24	BST	CDU	D	1 OF 1

DATE: 06OCT15

View File Created 27-JAN-2015 10:44:01